Installation & Maintenance Manual

PO Series Modulating
MM Mk5

Oil Burner

Tel: +44 (0) 1905 794331 **Fax:** +44 (0) 1905 794017 **Email:** info@nu-way.co.uk **Web:** www.nu-way.co.uk

CONTENTS

IMPORTANT INFORMATION *A.4*
SAFETY **A.4**
EMERGENCY INSTRUCTIONS **A.4**
EUROPEAN BOILER EFFICIENCY DIRECTIVE (B.E.D.) **A.4**
GENERAL INFORMATION *B.1*
INTRODUCTION **B.2**
FEATURES **B.2**
Burner Designation B.2
Burner Capacity B.2
Fuel B.2
Controls B.2
Operating Mode B.2
SITE CONDITIONS AND SERVICES **B.3**
Flue and Chimney Requirements B.3
Plant Room Ventilation B.3
Existing Appliances B.3
Oil Supply B.3
Electrical Power Supply B.4
BURNER PACKAGING, ASSEMBLY AND INSTALLATION **B.4**
Packaging For Transit B.4
Assembly And Installation B.4
Fitting To The Appliance B.4
Air Supply B.5
Combustion Chamber Conditions B.5
Electrical Power Supply B.5
TECHNICAL SPECIFICATION *C.1*
BURNER SPECIFICATION SHEET **C.2**
BURNER AND COMPONENT IDENTIFICATION **C.3**
BURNER CONTROL AND OPERATION **C.3**
Air Controls C.3
Oil Controls C.3
Control Panel C.4
Flame Monitor C.5
Modulating Control And Operation C.5
BURNER OPERATING SEQUENCE **C.6**
Burner Sequence Controller C.6
COMBUSTION HEAD DETAILS **C.6**
COMMISSIONING *D.1*
INDIVIDUAL SETTING RECORD **D.2**
SAFETY **D.2**
EMERGENCY INSTRUCTIONS **D.2**
INSPECTION **D.2**
INITIAL SETTINGS **D.3**
DRY RUN **D.3**
LIVE RUN **D.4**

General D.4
Oil Supply Temperature And Pressure D.4
Initial Checks D.4
Establishing The Flame D.4
Final Commissioning Stages D.6
Checking The Flame Signal D.6
Setting The Air Pressure Switch D.6
Set-Point Adjustment D.7
Final Checks D.7
On Completing Commissioning D.7
Commissioning Sheet D.9
E : Operation And Maintenance G.1
Normal Operation G.2
Automatic Modulation G.2
Routine Safety Checks G.2
Combustion Air G.2
Flame Detector G.2
Combustion Air Pressure Switch G.2
Routine Maintenance G.2
Combustion Air Fan G.2
Burner Inner Assembly G.3
Oil Filters G.3
Oil Preheater G.3
Fault Finding G.3
Error Checking, Fault Analysis & Identification Codes G.3
Incorrect Rotation of the Fan Motor G.3
Fan Motor Fails To Start G.3
Fan Motor Starts And Burner Goes To Lockout G.4
Start Flame Failure G.4
Main Flame Is Not Established G.4
Fan Motor Only Runs Continuously G.4
Spare Parts G.4
Burner Service Record G.5
Notes G.8
Notes G.9

Important Information

Safety

It is essential that the following instructions and adjustments are carried out by qualified engineers that are experienced in forced draught pressure jet oil burner commissioning. Nu-way cannot be held responsible for any consequential damage, loss or personal injury as a result of customers failing to follow these instructions, or as a result of misuse.

Emergency Instructions

P Series Burners are designed and constructed to meet all applicable European Directives.

When used in accordance with the instructions provided, P Series Burners are unlikely to produce a hazardous condition. If, however, such a condition should arise in connection with the burner, the appliance or any instrument, machine or service in the vicinity of the burner, the **FUEL AND ELECTRICITY SUPPLIES SHALL BE ISOLATED IMMEDIATELY** and they shall remain isolated until the fault has been identified and rectified.

European Boiler Efficiency Directive (B.E.D.)

All burners and boiler bodies marketed separately within the European Union must comply with EN267 - Oil Burners, and EN303 - Heating Boilers. Burner adjustments must be made in accordance with boiler manufacturers' instructions, and these must include flue gas temperatures, average water temperature and CO_2 or O_2 concentration.

General Information

INTRODUCTION

This handbook has been produced to enable users to install, commission and use P Series burners safely and efficiently. At each stage the conditions that should be met and the adjustments and other actions which should be carried out are detailed and the locations of the various components and adjustment mechanisms are identified. Where appropriate, this information is supported by tables and graphs.

Literature on the proprietary components used in P Series burner systems is available on request.

FEATURES

The P Series of fully automatic burner equipment is offered for industrial and air heater applications. This is a versatile range of fully modulating burners with a turndown of 3:1.

P Series burners meet current test authority requirements both in the UK and overseas.

P Series burners are designed for flange mounting to the appliance. All components are pre-wired, input and output circuits being grouped for ease of connection to the power supply and to electrical equipment on the burner head, air damper and oil pumping and heating units.

Larger sizes of PO burners can be supplied with air/steam oil atomisation in place of the usual pressure jet.

This technique, for larger thermal ratings, reduces emissions, increases turndown and prolongs oil pump life because lower oil pressures can be used.

For more information contact Nu-Way.

Burner Designation

Each burner is described by a comprehensive code that defines all the important parameters of each individual burner and is an important point of reference for burners in service. In addition to the burner casing size and maximum power output, the code is composed as shown in the Table on Page B.7.

Burner Capacity

The burner output (based on the gross calorific value) is shown on the Burner Specification Sheet on Page C.2 Technical Details.

Fuel

The PO is available in two forms, to use distillate or residual fuel oils.

Controls

The control panel, housed in a free-standing or wall-mounted cabinet, is a purpose designed and robustly constructed unit that complies with relevant Standards and Codes of Practice and can be tailored to individual customer requirements.

Depending on the burner specification, the control panel incorporates such components as a burner management sequence controller, a fuel selector switch (for the dual fuel range), modulating control gear, a starter for the combustion air fan, starters for fuel pumps and boiler feed water pump, and safety devices e.g. low and high water cut-out relays.

Air for combustion can be adjusted to give maximum efficiency. An air pressure switch provides safe shutdown if the combustion air supply becomes insufficient for complete combustion.

An ultraviolet (UV) cell and automatic programming control unit provide continuous flame supervision.

Operating Mode

P Series burners are all fully modulating offering a standard turndown of 3 to 1.

To ensure efficient operation of any boiler, two requirements are of paramount importance. The air to fuel ratio must be kept to a minimum whilst being sufficient for complete combustion and the settings for this condition, once arrived at, are accurately repeated. The temperature or pressure of the boiler must be monitored by the control system and the correct amounts of fuel and air fired to achieve the set value, variations from this set point must be minimised even when the load changes.

Modulation By Electro-Mechanical Systems

P Series burners can be supplied with a Landis and Staefa RWF40 modulating controller. This unit is designed specifically for the control of boiler temperature or steam pressure in oil- and gas-fired heating plant.

The system comprises a reversible motor that is coupled directly to the cam shaft of the modulating unit. Two adjustable cams are mounted on this shaft, one of which operates the air linkage and the other, the modulating oil cam.

Modulation By Electronic Cam System

There is some inherent hysteresis in all mechanical systems that traditionally involve cams and linkages to characterise the air/fuel ratio.

To improve accuracy, P Series burners are now normally supplied with a system that overcomes all of these problems by utilising independently operated servo-motor driven valves for the fuel and air and the latest microprocessor technology.

This Micro Modulation system (MM) provides a programmable and flexible means of optimising combustion quality throughout the load range of the boiler/burner unit whilst ensuring the temperature is accurate to within 1°C and pressure to within 1.5 psi by utilising P.I.D. control.

A control module contains a micro computer and power supply. The display panel features touch-sensitive key pad data entry, readouts and status indicators; all protected beneath a tamper-proof transparent plastic cover.

During commissioning, the paired values for fuel and air are entered into the memory of the module. Upto 15 positions in the load index of the burner's fuel delivery range are entered from maximum down to the minimum start position. This guarantees operation at the air/fuel ratios set during commissioning.

By removing the inherent hysteresis of traditional mechanical systems, combustion quality and fuel efficiency are greatly improved.

The M.M. system may be expanded, by adding a sampling unit and exhaust gas sampling probe, to measure and display CO_2, O_2, CO and exhaust temperature, together with boiler efficiency. This is the M.M. Exhaust Gas Analysis Trim System (E.G.A.).

This makes very small corrections to the air damper position to ensure that the originally entered commissioning data is adhered to, irrespective of variations in stack pressure or barometric conditions.

Other options include the Data Transfer Interface (D.T.I) which enables up to M.M modules to transmit data to a local computer and the Inverter Interface module (I.I.M) which enables an inverter to control the speed of the combustion air fan. Further details of these options is given on Page C.5.

Site Conditions And Services

Flue and Chimney Requirements

It is important that:

- the flue pipe from the appliance and the joint between this flue and the chimney are sealed to prevent leakage of combustion products
- the flue pipe from the appliance does not protrude into the chimney beyond the inside wall
- the top of the flue or chimney shall be higher than any roof within a radius of 10 metres
- checks are made to ensure that the chimney is suitable for oil-fired appliances and that the proposed installation complies with all Local Authority and other regulations covering such installations
- if more than one appliance is connected to a common flue or chimney, the cross section of this flue or chimney should be adequate for the total volume of combustion products from the appliances
- it is recommended that each appliance should be exhausted into a separate flue.

Plant Room Ventilation

An adequate dust-free supply of fresh air is required for the burner at both high and low levels in accordance with the appropriate standards.

Existing Appliances

The appliance should be prepared for installation of a P Series burner by thorough cleaning, including the removal of all adhering tar, scale and dirt. An inspection should also be carried out to ensure that the appliance is in good condition. Any doubt about the suitability of the appliance should be referred to the manufacturer.

Oil Supply

In addition to the oil system supplied with the burner, there are some requirements for the main oil storage and supply system that supplies oil to the burner system.

Main Oil Storage Tank

Residual fuel oils must be maintained at all times at the temperature specified by the fuel supplier. The Table on Page B.8 shows the temperatures and pressures for Class D, E, F and G oils.

Oil Deliveries

It is good practice to shut down boilers whilst the delivery of oil is made and allow 30 minutes for oil sediment to settle out before re-starting the burners.

Ring Main System

The oil from the tank must be supplied to the burner from a pumped ring main system. A typical system is shown on Page B.9.

The inlet pressure of the oil will depend upon the type of oil. Oil must be handled and delivered at the temperatures and pressures shown in the Table on the Burner Specification Sheet on Page C.2 Technical Specification.

The ring main pumps and pipe size must be designed to at least 1.25 times the total swept volume of the burner pump(s) it supplies. Oil supply pipes must be constructed and installed to comply with local conditions and appropriate Codes and Standards. All pipework must be supported firmly, and in the case of residual oils, lagged, traced and thermostatically controlled. (The minimum pipe size is 1.5 inch BSP).

Galvanised steel pipe should not be used.

It shall be of sufficient size to satisfy the pressure and volume flow requirements of the burner under all firing conditions.

Checks should be made to ensure that all meters and other components are appropriately rated for the maximum flow rate that is anticipated.

The final connection to the oil pump inlet port should be made using the flexible pipe supplied with the burner.

Precautions For Residual Oil

If heavy oils are heated to too high a temperature, then lighter fractions will vaporise and this will cause premature wear to the pump.

It is essential to filter heavy fuel oil before the burner inlet. The filtration system should be selected according to the individual features of the installation but the diagram on Page B.9 gives some basic guidelines. The ring main pressure should be measured at the pump vacuum gauge port to allow for any pressure drop caused by the filters.

For residual oil burners the pipework should be insulated, trace heated and thermostatically controlled.

Electrical Power Supply

A three phase 50 Hz electrical supply is required. Power requirements are listed on the Burner Specification Sheet on Page C.2 Technical Specification. The power supply provided must comply with all relevant Codes and Standards.

Burner Packaging, Assembly And Installation

Packaging For Transit

All PO Series modulating burners are supplied in partly assembled form consisting of the following:

- burner head and air plenum chamber
- damper section with modulating air system
- modulating oil system as appropriate
- combustion air fan
- floor/wall mounted burner control panel
- a pumping and heating unit, or pumping unit only for distillate oil burners, is supplied as a separate component inclusive of flexible pipes to make all necessary oil connections.

Assembly And Installation

P Series burners are supplied in partly assembled form comprising some or all of the units indicated above, depending upon the type(s) of fuel to be fired.

Make sure that the appliance is suitable for the heat input of the burner. If there is any doubt in this area, reference should be made to the appliance manufacturer.

Fitting To The Appliance

If the burner is to be fitted to a new appliance refer to the manufacturer's recommendations.

If the burner is to be fitted to an existing appliance, the burner front plate and appliance must be prepared; the details of the drilling arrangements are shown on Page B.8.

The chimney, flues, passageways and heat transfer surfaces on the existing appliances must be cleaned. An inspection should be carried out to ensure that the appliance is in good condition. Any doubt about the suitability of the appliance should be referred to the manufacturer.

To assemble the burner:

1. Fit the burner head to the prepared appliance front plate.

Supplement to Handbooks

Specification Changes

New Wiring Colours

In accordance with the Requirements for Electrical Installations BS 7671:2001 Amendment No 2 (the IEE wiring regulations), wiring colour coding has been amended to Brown (L) and Blue (N) for single phase power circuits and Brown (L1) Black (L2) and Grey (L3) and Blue (N) **in three phase power circuits** from 1 June 2006.

Full details of the changes can be found in Amendment No 2 (AMD 14905) to BS 7671:2001 - which is a free download from the IEE website (www.iee.org/cablecolours). They are also within the new version of BS7671:2001 (Incorporating Amds 1& 2) published on 31st March; this new version of the Wiring Regulations can be identified by its brown cover.

2 Ensure that the joint between the burner and the mounting flange is sealed effectively using the gasket provided. The flame tube should not generally extend beyond the inner face of the furnace brickwork or the front plate protection, except where extensions have been expressly specified by the appliance manufacturer.

3 Fit the damper section to the burner head using the fasteners and gasket provided.

4 Position the combustion air fan and connect the damper section using the fasteners and gasket provided. Depending on the appliance layout it may be necessary for the customer to provide a connecting duct section between the damper and the fan scroll (not supplied by Nu-way).

5 For PO burners, place the pumping and heating unit (or pumping unit) in the desired position.

6 Connect the flexible oil pipes from the oil inlet and return to the pumping (and heating) unit, and the main oil supply pipework.

7 Locate the control panel in the desired position and make the necessary connections between the burner head, pumping (and heating) unit and other auxiliary appliance controls.

Reference must be made to the wiring diagrams that are supplied with the burner (electrical connection diagrams do not form part of this handbook); all electrical wiring must comply with all applicable Codes and Standards.

Air Supply

A floor-mounted fan provides the air supply for the system, although the fan can be suspended for the smaller sizes of burner. The flange on the rectangular outlet is drilled for bolting onto the air damper section of the burner unit. For safety, a wire mesh guards the circular inlet of the fan. The motor unit is enclosed, air-cooled and mounted on a rigid base. The fan orientation/burner mounting positions would have been specified by the customer when the order was placed.

Combustion Chamber Conditions

When the burner is fitted to an appliance designed to work under balanced or negative combustion chamber conditions, the over-fire draught must not exceed 0.05 kPa (0.2 inches water column, 0.5 mbar or 5 mm w.c.). Should the over-fire draught exceed this value, then steps should be taken to reduce it to or below this level.

Electrical Power Supply

Connect the power supply to the burner observing all applicable Codes and Standards. Reference should be made to the wiring diagrams provided in the instruction pack that is supplied with all P Series burners and to those wiring diagrams in the appliance manufacturer's instructions.

All external auxiliary control circuits should be connected with reference to the appropriate wiring diagram. All systems and circuits should be checked to ensure that correctly rated fuses are used.

BURNER DESIGNATION CODE

P O R 310 / 8.4 40 M 3 L 340

Burner Prefix

Fuel Type
- O-Oil
- G-gas
- DF-Dual Fuel

Fuel Sub Type
- R-Residual
- L-Light Oil
- N-Natural Gas
- L-LPG

Burner Casing Size

Burner Max. Power MW

Nominal Fan Pressure
- 40-40 mbar
- 26- 26 mbar

Control Mode
- M-Fully Modulating
- MM-Micro Modulation

Electrical Supply
- 3-Three Phase

Control System Type
- N-None
- L-Landis & Staefa
- S-Satronic
- A-Autoflame

Flame Tube Projection

	Comment	Option
BURNER PREFIX	All burners in this series are prefixed 'P'.	P
FUEL TYPE	The fuel on which the burner is designed to operate is identified as :	'O' : Oil 'G' : Gas 'DF' : Dual fuel
FUEL SUB-TYPE	The standard fuel sub-types which can be specified are:	'L' : Light oil 'R' : Residual oil 'N' : Natural gas 'L' : Liquefied petroleum gas
CASING SIZE	Obtained from the Burner Specification Sheet.	
MAXIMUM POWER	Obtained from the Burner Specification Sheet.	
NOMINAL FAN PRESSURE	There are two standard options which may be specified for burner fan pressure, according to the appliance resistance (mbar). Please consult Nu-way's Technical Department for resistances greater than 15 mbar.	Resistance up to 7.5 mbar : '26' Resistance up to 15 mbar : '40'
CONTROL MODE	All Nu-way 'P' series burners are fitted with fully modulating controls, as shown by the code 'M'.	M
ELECTRICAL SUPPLY	In standard form, 'P' series burners require 415 volt, 3 phase (4 wire), 50 Hz electrical supplies, which are designated by the code '3'. Other requirements should be discussed with Nu-way's Technical Department.	3
BURNER MANAGEMENT SEQUENCE CONTROL SYSTEM TYPE	In order to ensure that individual customer needs are matched precisely by the 'P' series burner specification, Nu-way use not only several different types of burner management sequence controller but also systems based on programmable logic controllers (	'N' : None 'L' : Landis & Staefa 'S' : Satronic 'A' : Autoflame
FLAME TUBE PROJECTION	The flame tube projection on Nu-way 'P' series burners is matched to the individual application.	Manufactured to specified length

Oil Handling Temperatures And Pressures

Fuel Handling Temperatures (°C)					Fuel Delivery Pressures	
Fuel Class	Viscosity (Seconds)	Minimum From Tank	Burner Inlet	Atomising	kg/cm^2	psi
D	35	Minimum 5 Recommended			0.35 to 0.70	5 to 10
E	200	16	16	82	4 to 5	57 to 71
F	960	30	43	110		
	1500	36	65	118		
G	3500	50	82	132		
	4200	55	86	140		

Burner Mounting Detail

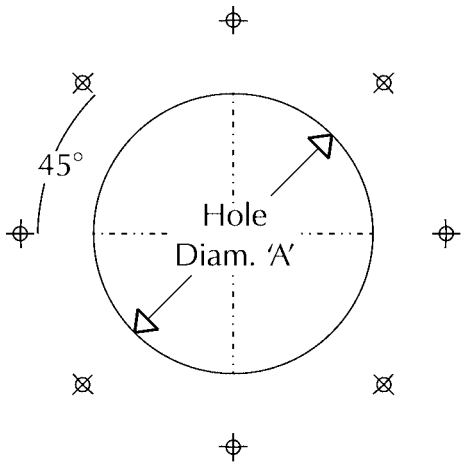

8 Holes tapped M12
equispaced on 'B' mm PCD

Burner Model	'A' (mm)	'B' (mm)
PO160	360	610
PO250 (5.1-6.0)	360	672
PO250 (6.2-7.3)	385	672
PO310	410	672
PO400	435	672
PO490 (12.1-12.8)	435	672
PO490 (13.2-14.3)	465	672
PO575	535	772
PO660	535	772

Typical Pumped Oil Ring Main

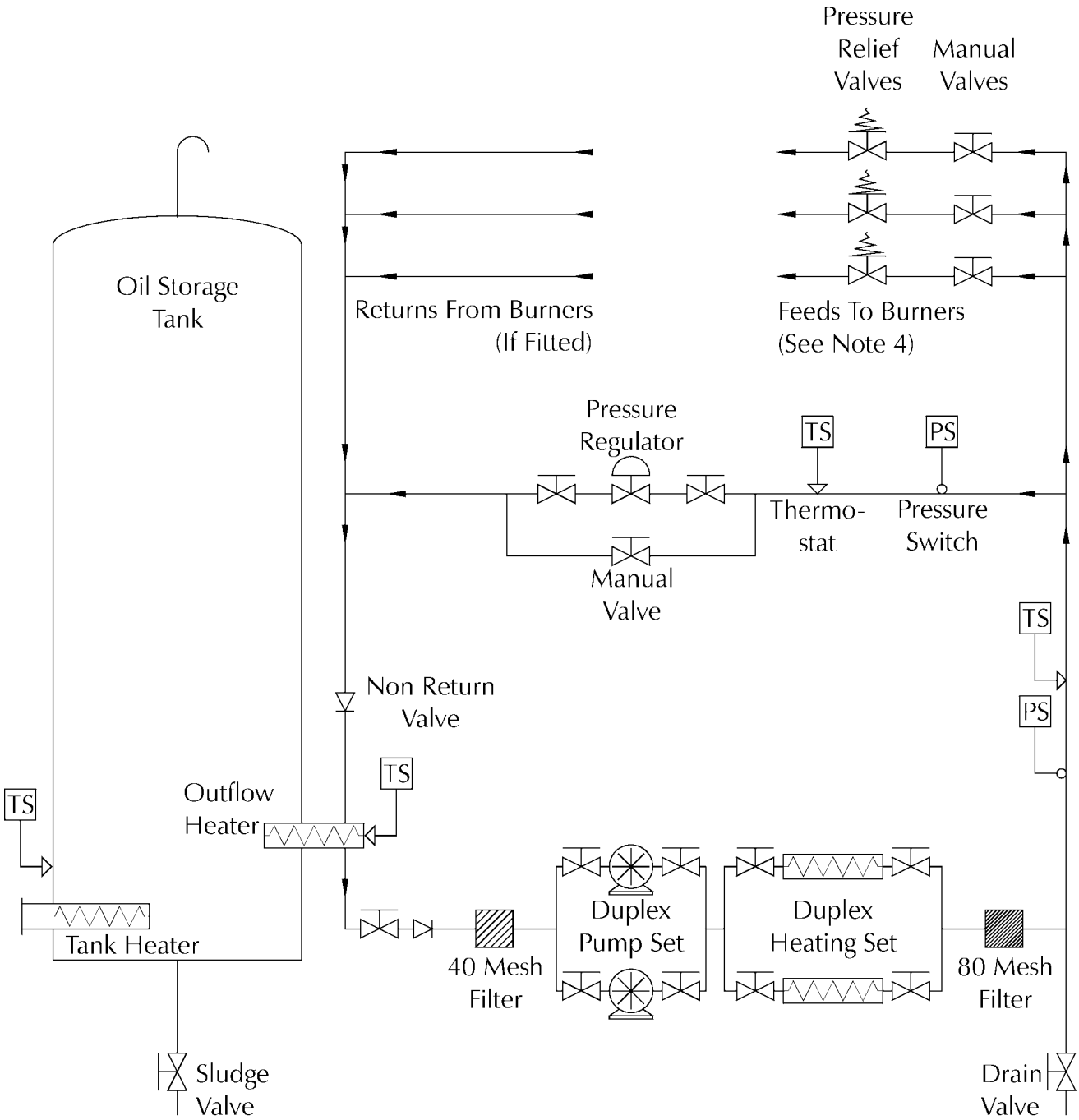

Notes:

1 Duplex pumps and heaters are recommended for continuity and serviceability.

2 Line heaters are recommended for Class F and G fuels, but are not normally necessary for Class E fuel.

3 Pre-heating Class D fuel is not normally required, but a minimum temperature of 5 °C should be maintained and all exposed pipework must be lagged.

4 If a shut-off valve is fitted in the supply line to the burner oil pump inlet then a pressure relief valve MUST also be fitted to prevent damage should the shut-off valve be inadvertently left closed during the burner start-up cycle. The relief valve must be set at 0.70 kg/cm^2 (10 psi) above the normal supply pressure.

Technical Specification

Burner Specification Sheet

The information contained on this sheet describes the burner as supplied by Nu-way. If the burner is modified after delivery then this sheet should be updated as necessary.

Designation : _____ Capacity : _____ MW

Specification No. : _____ Serial No. : _____

Fuel 1 : _____ Fuel 2 : _____

Components :

Modulation Controller : _____

Burner Sequence Controller : _____

Fuel Modulating Motor : _____

Air Modulating Motor : _____

Air/Gas Ratio Controller : _____

Fuel Gas Valve Proving System : _____

Oil Atomising Method : _____

Oil Pump Manufacturer : _____ Model : _____

Oil Pre-heater Type : _____

Fan Speed Controller : _____

Electrical Power Requirements :

Fan Motor Power :		kW		hp
Fan Motor Current Start :		Amps		
Fan Motor Current Run :		Amps		
HRC Fuse :		Amps		
Oil Pump :		kW		hp
Pre-heater :		kW		

Fuel Pressure And Temperature Requirements (At Burner Inlet) :

Fuel 1 :	Pressure :		psi	Temp.		°C
Fuel 2 :	Pressure :		psi	Temp.		°C

Other Services

Steam Atomiser:	Flow :		Pressure :		psi
Steam Pre-heater :	Flow :		Pressure :		psi
Atomising Air :	Flow :		Pressure :		psi

Comments :

Burner And Component Identification

The general arrangement of a PO burner employing Microprocessor Mini MM Mk. 5 modulation is shown in the diagram Burner and Component Identification on Page C.7. An enlarged view of the burner head casing is shown in the diagram on Page C.8.

These diagrams are for illustrative purposes only and actual components supplied may vary from those shown.

Burner Control And Operation

All personnel concerned with commissioning and/or operation of P Series burners should familiarise themselves particularly with the information presented in this section.

Air Controls

Air Damper

To control the air for combustion, PO burners have an adjustable multi-blade damper located in a rectangular section attached directly to the burner casing (diagrams on Pages C.7 and C.8). This damper is driven directly by a servo-motor and must be set during commissioning.

Air Diffuser

An air diffuser (shown in the diagram Burner Head on Page C.18) is fitted to the front end of the inner assembly and is located within the flame tube. It directs the combustion air flow and creates a pressure drop across the burner head, promoting good air/fuel mixing and flame stability.

Air Pressure Switch

The air pressure switch is located on the rear of the burner casing. Its function is to ensure that the combustion air flow is adequate under all operating conditions.

An air flow failure at any stage beyond the first few seconds of the pre-purge period will result in a safe burner shutdown.

Oil Controls

The components **vary according to whether distillate or residual oil is fired**. In all cases a two-pipe system is essential to ensure that the oil pump remains primed. The oil must be supplied and maintained at the temperature and pressure given in the Table on Page B.8.

Burners with the Microprocessor Mini MM Mk. 5 modulating system are supplied with an oil system (see diagrams on Page C.10 Distillate Oil Control Train Schematic and on Page C.11 Residual Oil Control Train Schematic) consisting of :

- pumping/heating set
- oil manifold block
- oil valve (normally-closed; for distillate fuel oil)
- inner gun assembly housing the oil nozzle
- oil solenoid valve (tip shut-off)
- motorised spill control valve
- non-return valve

Pumping Set For Class D Fuel

The pump unit is free standing and comprises :

- oil pump
- motor
- oil filter(s)
- air bottle

The unit is assembled for floor mounting (see diagrams Distillate Oil Pumping Set on Page C.12 and Oil Pumps on Page C.9). This unit is designed to deliver the oil volume and pressure for the required burner output.

Filter(s) are an integral part of the burner oil supply system. The filter(s) should be checked regularly as failure to do so may result in a drop in oil pressure to the system.

Pumping/Heating Set For Class E, F and G Fuels

The pump unit is free standing and comprises :

- oil pump
- motor
- hot oil filter
- cold oil filter(s)
- air bottle
- isolation valve (for residual fuel oil)
- return thermostat
- oil pre-heater tank with thermometer to record the temperature of the oil at the outlet. The pre-heater contains three thermostats:
    - High limit thermostat

- Control thermostat
- Low limit thermostat (reverse acting)

The return thermostat is fitted in the return oil line and will override the burner firing controls and start the burner oil pump in order to maintain the correct oil temperature in the nozzle and burner pipework.

The thermostats should be set to the temperatures specified in the Table forming part of diagram Residual Oil Pumping Set on Page C.13.

The unit is pre-assembled on a base plate for floor mounting (see diagrams Residual Oil Pumping Set on Page C.13 and Oil Pumps on Page C.9). This unit is designed to deliver the oil volume at temperature and pressure for the required burner output.

The pump should not be started when the oil is cold as this can lead to damage to the pump and couplings. The oil must be supplied and maintained at the temperature and pressure given in the Table on Page B.8.

Filter(s) are an integral part of the burner oil supply system. The filter(s) should be checked regularly as failure to do so may result in a drop in oil pressure to the system.

Oil Manifold

The oil manifold block is located on the burner casing and incorporates pressure gauges to measure pump and spill pressures.

Solenoid Valve

For burners designed for distillate oil firing there is a solenoid valve which is 'normally-closed' and is located between the manifold block and the oil lance (see diagram on Page C.10).

There is no solenoid valve fitted when the system is designed to fire residual oil (see diagram on Page C.11).

Inner Assembly Gun

The oil inner assembly gun is located in the middle of the head casing assembly of the burner. Its primary function is to carry oil from the oil pump to the nozzle and to recirculate the oil back through the spill regulating valve.

The spill-back atomiser utilises a spring loaded orifice shut-off needle that is closed by the spring of the actuating piston of the burner lance. This guarantees a reliable shut-off under any condition. This piston is driven by the supply pressure, via a branch pipe, and controlled by a solenoid valve. The needle opens by means of a spring and moves to the correct position governed by a fixed stop on the needle itself.

During the pre-purge period the needle holds the orifice closed and the fuel oil circulates through the lance and the atomiser under the set supply and return pressure. When the solenoid is actuated, immediate oil atomisation and ignition are achieved.

Oil Nozzle

PO Series pressure jet burners use a Fluidics atomizing nozzle as shown in diagram Fluidics Oil Nozzle on Page C.6.

The primary function of the nozzle is to spray oil in a suitable pattern into the combustion air stream at a rate commensurate with the appliance's thermal rating.

Oil Solenoid Valve (tip shut-off)

This valve operates the needle that releases oil to the burner tip.

Motorised Spill Control Valve

This valve regulates, via the modulating controller, the spill pressure to give the appropriate oil flow rate over the burner's operating range.

A fuel valve operated by a servo-motor is used.

Non-return Valve

This valve allows flow in one direction only.

Control Panel

The control panel is a separate unit, free-standing or wall-mounted, that is positioned adjacent to the burner unit. The panel design depends upon whether the boiler is for water heating or steam raising. The sequence controller, relays, indicating lamps, panel isolating switch etc. are contained within this unit.

The burner is also fitted with an ignitor/terminal box on the side of the burner casing. This is a junction for all electrical components that are held in the free standing control panel.

Connections must be made between the control panel and the terminal box.

Flame Monitor

All P Series burners are fitted with continuous flame supervision systems employing an ultraviolet (UV) cell to detect the presence of a flame.

Modulating Control And Operation

The burner employs a microprocessor modulating controller. Detailed information of this system will have been provided separately with the burner.

The control module contains a micro-computer and power supply. The display panel has touch sensitive key pad entry, readout and status indicators, all protected beneath a tamper-proof protective cover (see diagram Burner Modulation Controller : Mini MM Mk. 5 on Page C.16).

The fuel and air flows are each controlled by separate servo-motors (see diagram Positioning Motor on Page C.16) driven by the modulation controller.

One motor positions the air damper and the other operates a pair of linked fuel valves by which it is possible to control the input of oil. During commissioning it is necessary to adjust the potentiometers in these positioning motor assemblies.

The position of each servo-motor is monitored by a voltage dividing system enabling digitised information to be encoded into the control module's memory. The relative positions of the air and fuel motors are checked constantly by the system at the rate of 50 times per second.

The modulation controller displays angular positions of the air damper motor and fuel valve motor. 'Required' and 'Actual' boiler temperatures or pressures are also displayed.

During commissioning the Mini MM Mk. 5 must be set at high flame, low flame and a number of intermediate positions.

The commissioning procedure is provided in the Section D, Commissioning. The Mini MM Mk. 5 manual, issued separately with the burner, should be consulted for further information if required.

Exhaust Gas Analyser (EGA)

The EGA system expands the capabilities of the modulation controller by measuring and displaying O_2, CO_2, CO, (NO, SO_x optional), exhaust temperature and boiler efficiency.

The data are fed back to the controller which uses the information to trim the air damper position. This ensures that the air/fuel ratios set for each rating during commissioning are maintained during normal operation despite variations in stack pressure, barometric conditions and fuel properties.

The EGA module can be connected to an energy management system to track and record the information generated by the analyser.

Data Transfer Interface (DTI)

A further option is the DTI which is a data acquisition system that can collect the operational data from up to 10 MM modules on one site. The data can be transmitted via an RS 232/422 link to a local computer or building management system using the MODBUS protocol. Alternative DTI firmware allows the DTI to integrate the rest of the combustion management system with other control systems.

WIinCDTI software brings control of the combustion management system to a PC, providing on/off control as well as temperature and pressure set-point adjustment of the burners. The PC can be local or connected remotely by modem. Alarm conditions can be defined and, if triggered, the software can advise of the condition via a pager.

Inverter Interface Module (IIM)

The optional IIM enables an inverter to be controlled so that the speed of the combustion air fan can be matched to the air flow required by the burner. The use of an inverter in conjunction with an air damper gives more precise control, a greater turndown and considerable electrical power savings. The IIM is described in more detail in the relevant section of the Autoflame manual.

Air for combustion can be adjusted to give maximum efficiency. An air pressure switch provides safe shutdown if the combustion air supply pressure becomes insufficient for complete combustion and the burner's additional safety systems include an ultraviolet (UV) cell and automatic programming control unit to provide continuous flame supervision.

Temperature Detector

The temperature detector (shown in the diagram on Page C.17) is specific to the modulation control system and is available in various ranges.

Pressure Detector

The pressure detector (shown in the diagram on Page C.17) is specific to the modulation control system and is available in various ranges.

Burner Operating Sequence

The operating sequence of P Series Burners (refer to the diagram Burner Sequence Timing Chart on Page C.15) begins with checks on external interlocks and a check for no flame, a pre-purge period on full air is then initiated.

On completion of the pre-purge period the appropriate oil valve or valves open, ignition is initiated and low fire is established then the burner modulates to high fire.

The burner sequence controller will then continue to its normal operating position (i.e. it continues to supervise the control functions and is therefore able to shutdown the burner safely should this be necessary), after driving to high fire, the burner will be controlled by the modulation controller, an electronic cam system, in response to the pressure and/or temperature requirements of the appliance.

Burner Sequence Controller

The burner sequence controller, together with the flame monitoring system, provide a safe light-up sequence for the burner.

A Landis & Staefa burner controller of the type LFL1.3-- (see the diagram Burner Sequence Controller : Landis & Staefa LFL1.3 on Page C.14) is fitted as standard.

Combustion Head Details

The combustion Head and Inner assembly are shown in the diagram Burner Head on Page C.18.

Fluidics Oil Nozzle

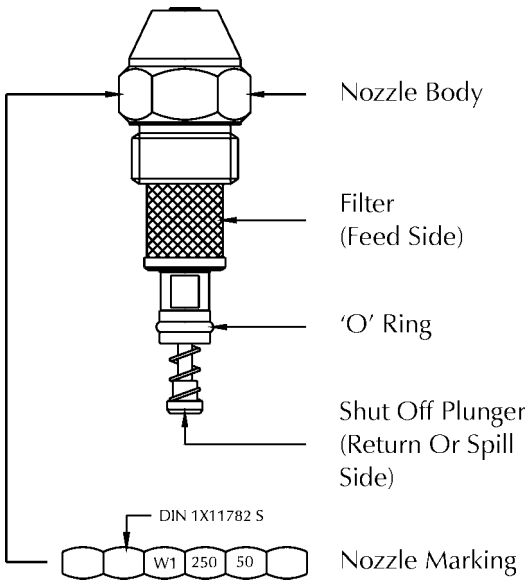

Burner And Component Identification

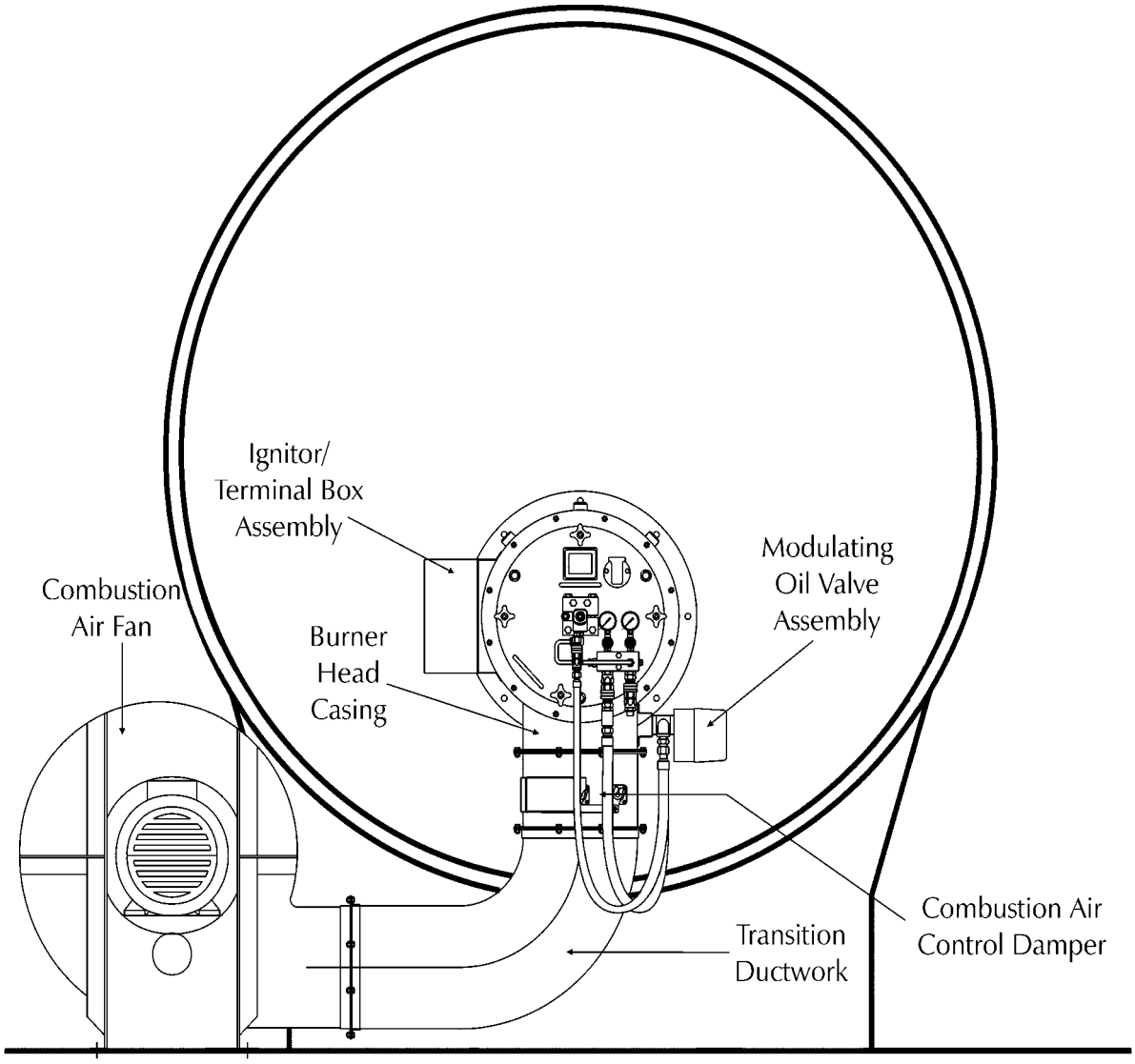

This diagram is for illustrative purposes only.

Actual components supplied may vary from those shown.

Please refer to the Burner Specification Sheet and the drawings elsewhere in this manual for details of the components supplied.

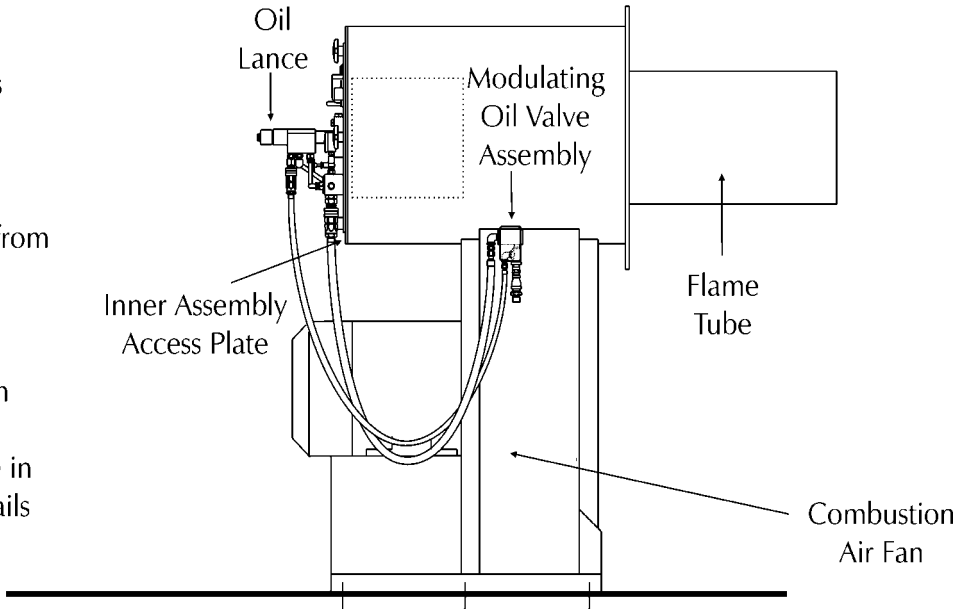

Item	Component
1	Burner Head Casing
2	Oil Non-Return Valve
3	Oil Spill Return Valve
4	Fuel Control Servomotor
5	Guide Rod Socket (3x'b')
6	Inner Assembly Backplate
7	Sight Glass
8	Backplate Adaptor Ring
9	U.V. Cell Holder
10	Ignitor And Terminal Block Assembly
11	Spill-back Oil Lance
12	Burner Lance Clamp Block
13	Inlet Oil Pressure Gauge
14	Nozzle Tip Shut-off Solenoid
15	Backplate Withdrawal Handles
16	Spill-back Oil Pressure Gauge
17	Nozzle Tip Shut-off Bleed Line
18	Backplate Retaining Nuts (4x'a')
19	Air Damper Unit
20	Air Damper Servomotor
21	Air Control Vane

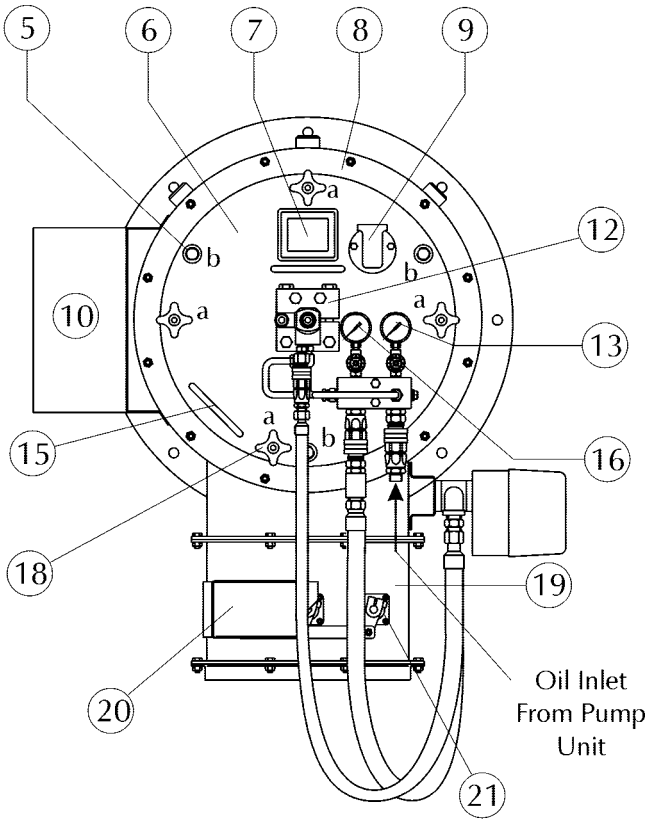

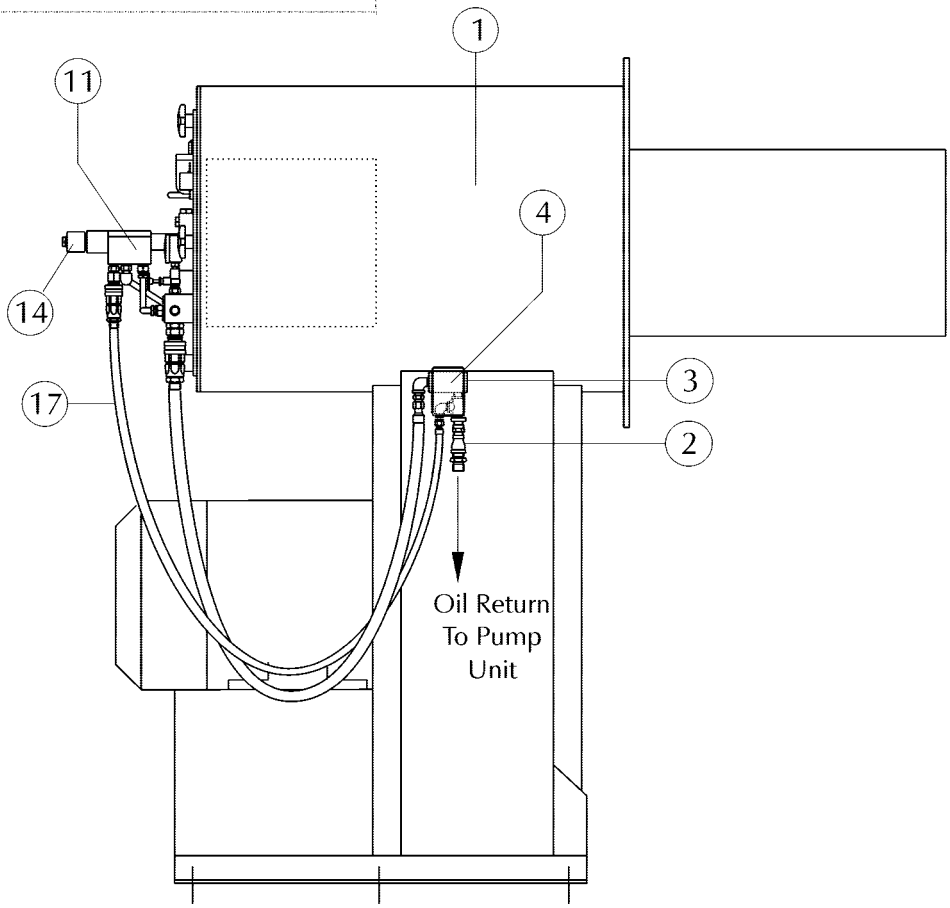

Suntec T Series Oil Pump With TV Pressure Regulator

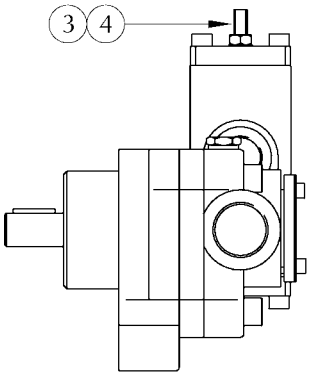

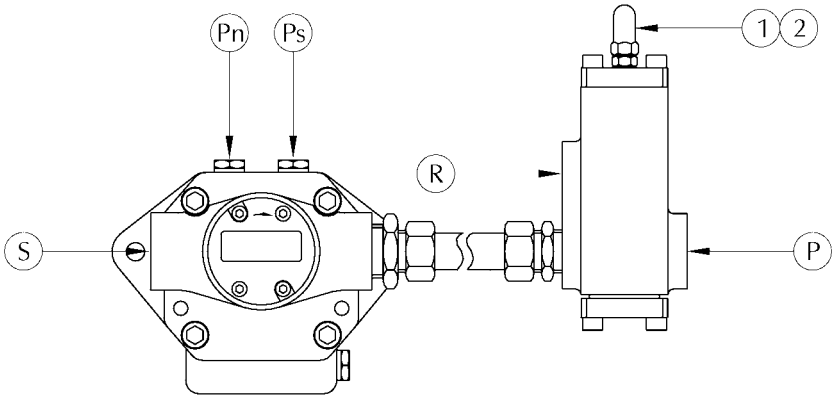

Pump Connections	
Item	**Description**
P	Pressure port
R	Return port
S	Suction port
Pn	Vacuum gauge and internal bypass plug
Ps	Pressure gauge
1	Regulator cap nut
2	Washer
3	Regulator screw
4	Locknut

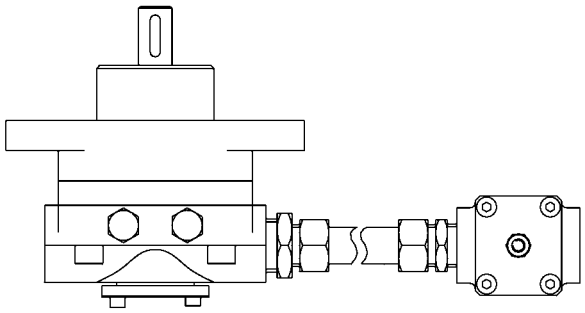

Safag Oil Pump

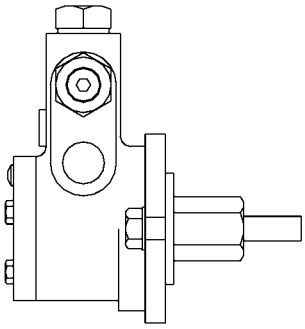

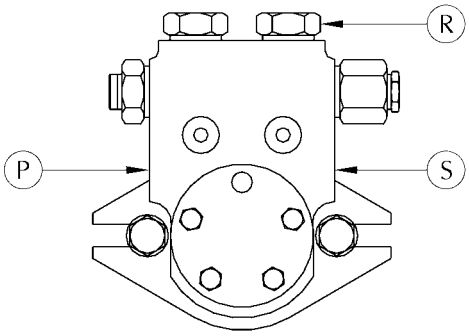

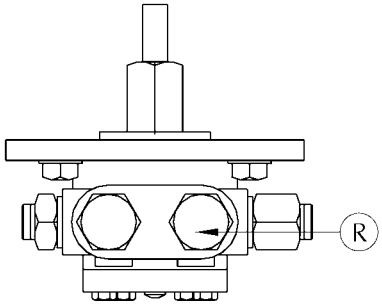

Distillate Oil Control Train Schematic

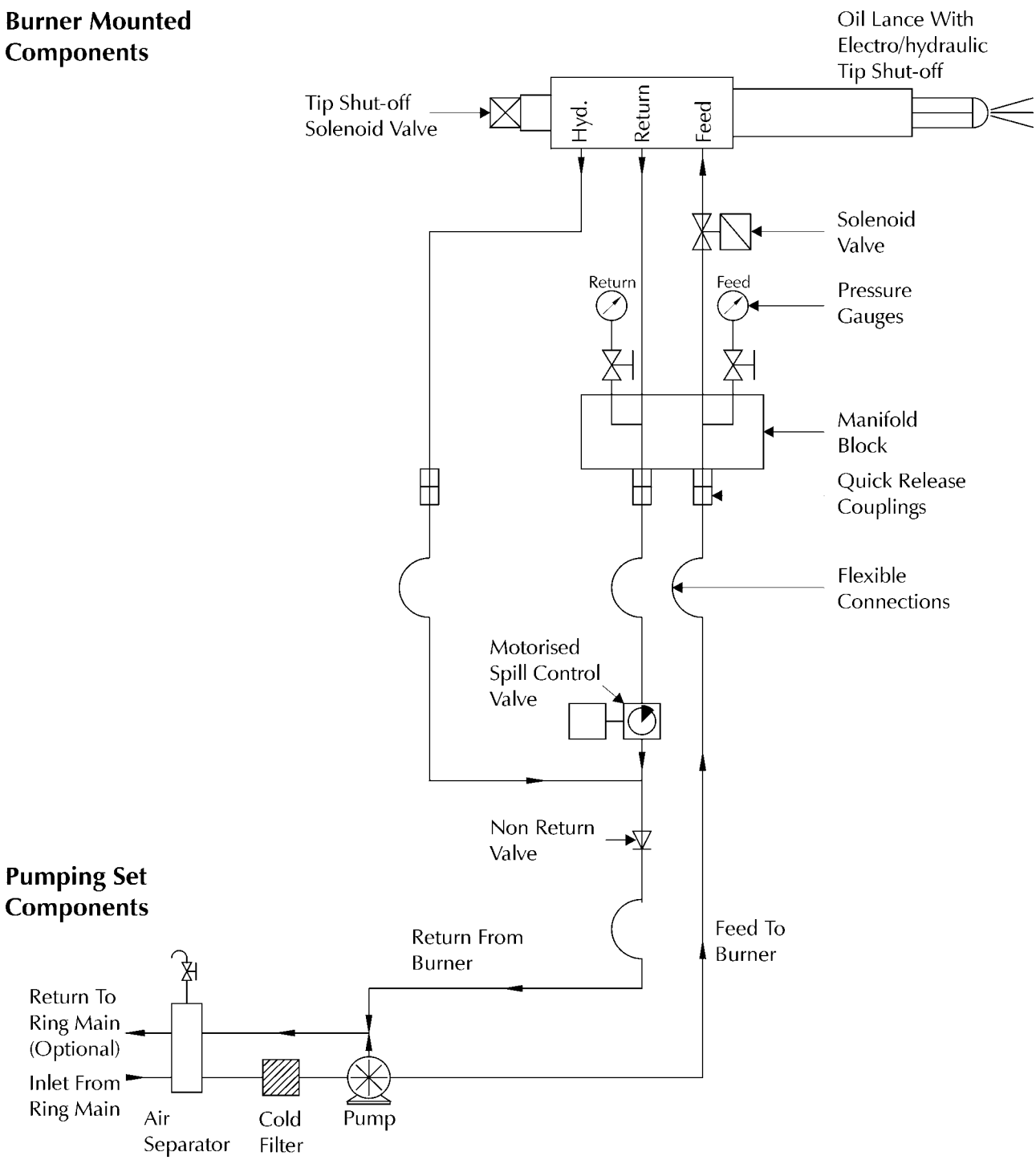

Notes:

1 All interconnecting pipework must have a minimum bore of 19 mm (3/4″) and must be pressure rated for 42 kg/cm^2.
2 Pipework connections between the burner oil system and the separate pumping set are not supplied by Nuway.
3 Connections to the ring main on the air separator bottle are 1″ BSP

Residual Oil Control Train Schematic

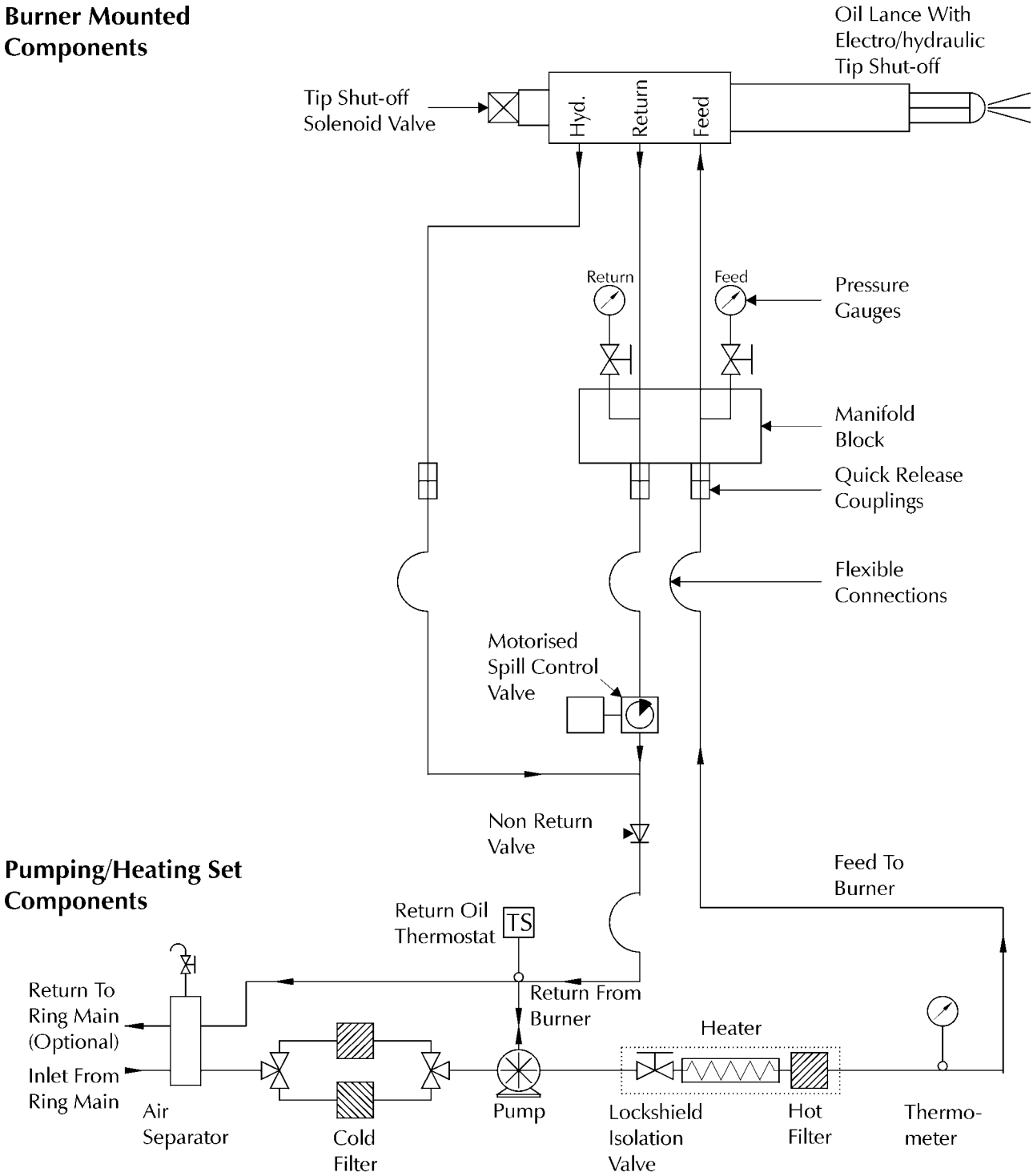

Notes:

1 All interconnecting pipework must have a minimum bore of 19 mm (3/4″) and must be pressure rated for 42 kg/cm^2.
2 On residual fuel oil burners this pipework must be maintained at the burner atomising temperature and in the case of class F and class G fuels must also be trace heated.
3 Pipework connections between the burner oil system and the separate pumping/heating set are not supplied by Nuway.
4 Connections to the ring main on the air separator bottle are 1″ BSP

Distillate Oil Pumping Set

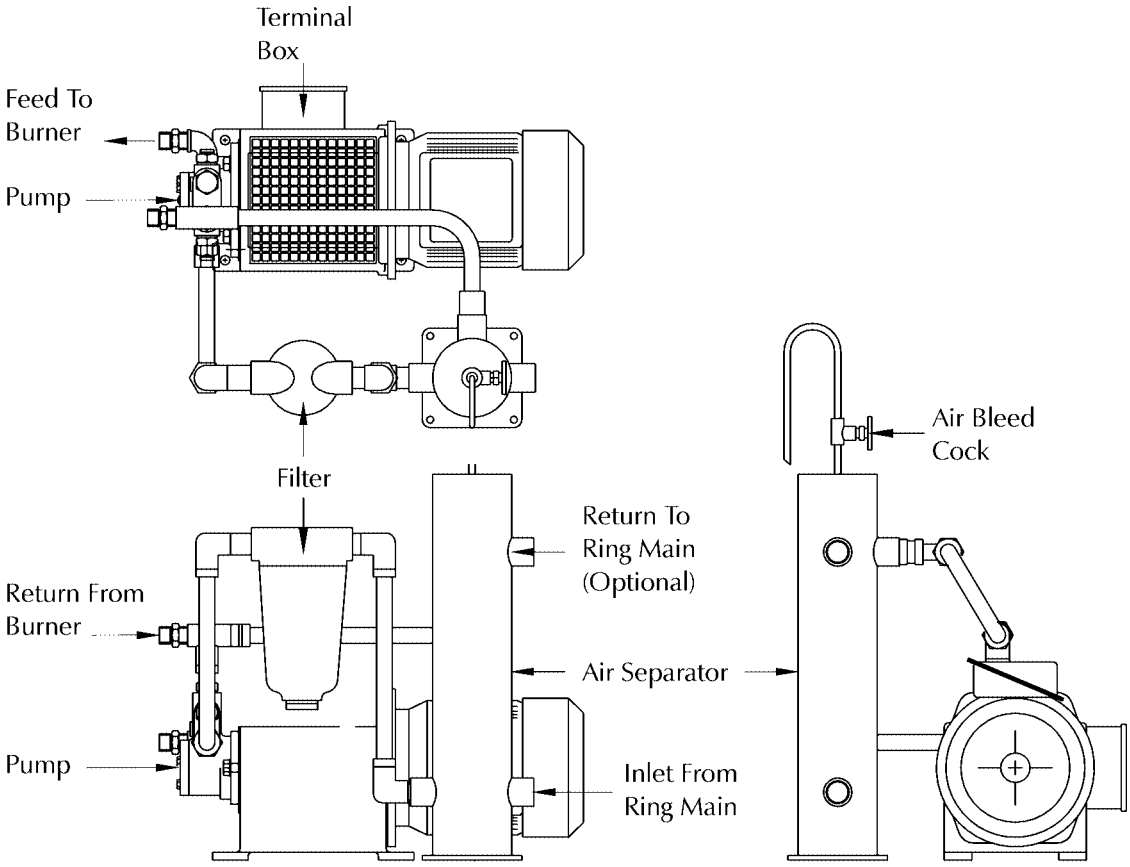

Schematic :

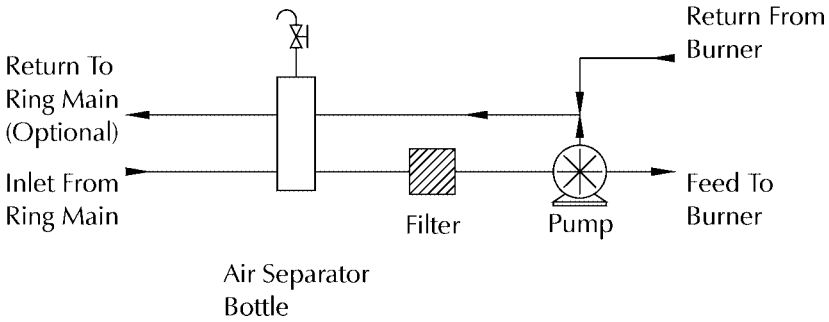

Residual Oil Pumping/Heating Set

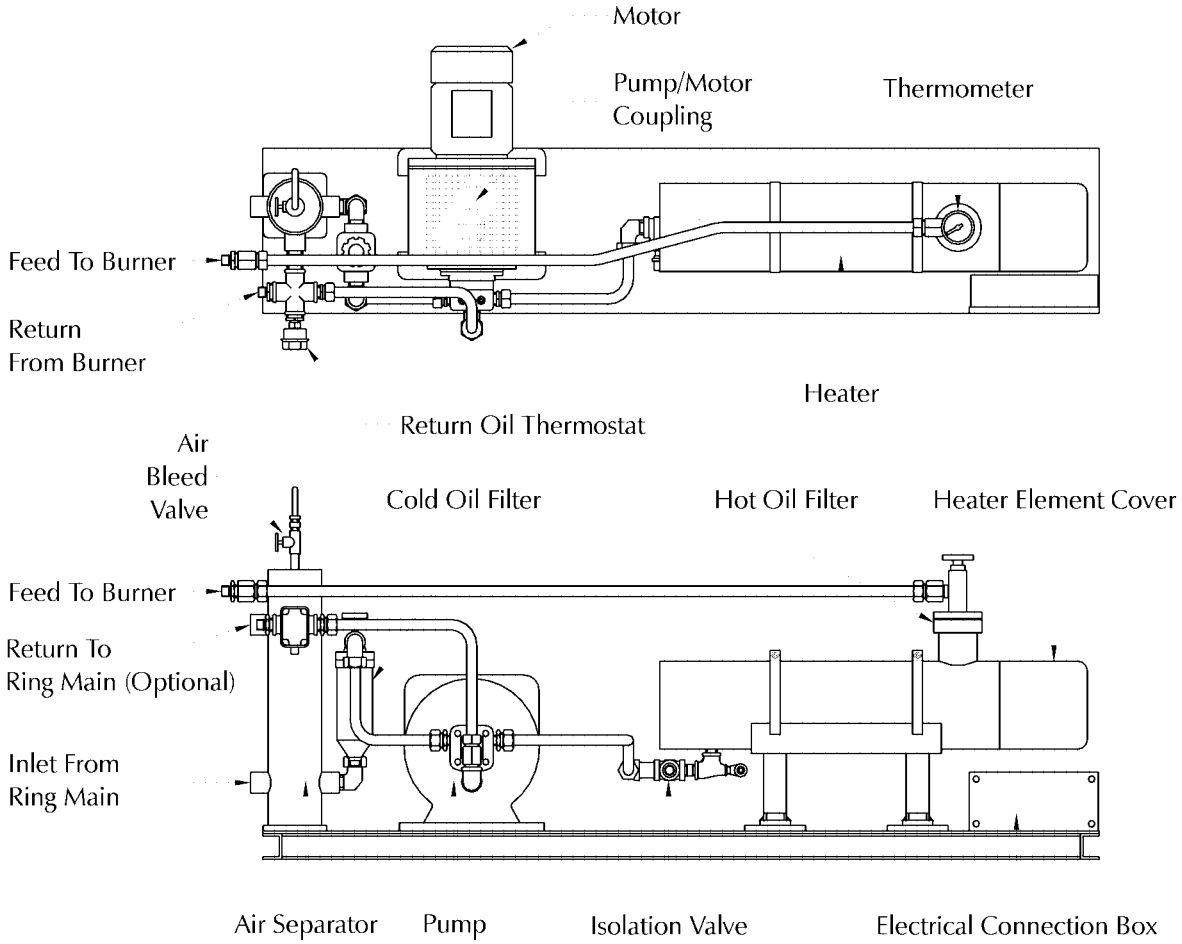

Notes:

1) A single cold oil filter is shown above. In some instances duplex filters may be fitted (as in the schematic below).
2) The high limit, control and low limit thermostats are located beneath the heater element cover.

Schematic :

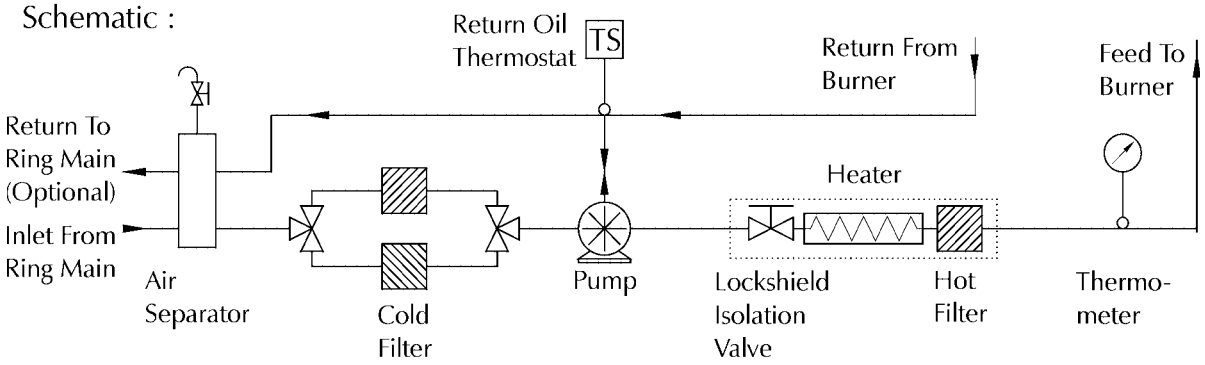

Thermostat Settings				
Fuel Class	**High Limit**	**Control**	**Low Limit**	**Return Oil**
E	110°C	85°C	65°C	40°C
F	130°C	100°C	80°C	50°C
G	150°C	140°C	100°C	70°C

Burner Sequence Controller : Landis & Staefa LFL1.3

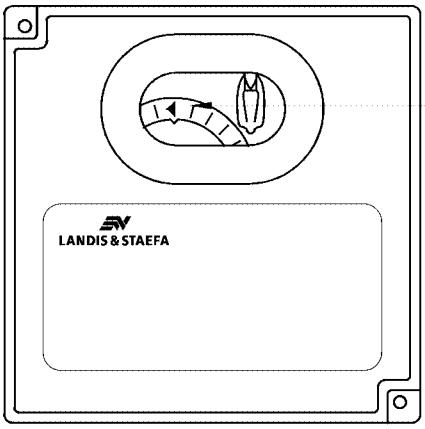

Sequence Indicator

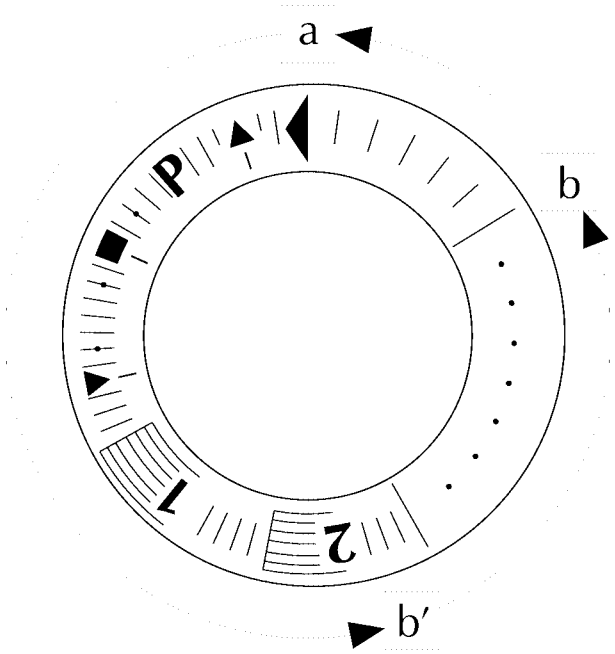

Enlarged Detail Of Sequence Indicator

In the event of a fault condition the sequence disc stops rotating, with the symbol appearing above the indicator mark indicating the nature of the fault.
If the fault leads to a lockout condition the orange lockout indicator will be illuminated.

Symbol	Lockout	Fault
◀	No	Failure of one or more of the pre-start checks. Before allowing the sequence to begin the unit carries out the following checks: Burner Controller not in lockout position Air Damper closed (proved by limit switch supplying voltage from terminal 11 to terminal 8) Fuel Valves closed (proved by limit switch supplying voltage to terminal 12) Air Pressure Switch indicating 'no air' (proved by voltage present on terminal 4) Fuel Gas Pressure Switch, Limit Thermostat or Limit Pressure Switch all closed (proved by continuity between terminals 4 and 5)
▲	No	Interruption to sequence whilst controller waits for the air damper to drive to open position (proved by servo motor limit switch).
P	Yes	Lockout caused by the failure of the air pressure switch to changeover from the 'no air' position shortly after the start of the pre-purge
■	Yes	Lockout caused by a fault in the flame supervision circuit.
▼	No	Interruption to sequence whilst controller waits for the air damper to drive to start position (proved by servo motor limit switch).
None	Yes	Lockout during the pre-ignition period not marked by a symbol is usually caused by premature flame signal.
1	Yes	Lockout caused by the absence of a flame signal at the end of the first safety period (time for start flame establishment).
2	Yes	Lockout caused by the absence of a flame signal at the end of the second safety period (time for main flame establishment).
I	Yes	Lockout caused by the loss of the flame signal during normal operation.
◀	Yes	Lockout caused by flame signal (either real or due to extraneous light) or flame supervision circuit fault after completion of shutdown.

Burner Sequence Timing Chart

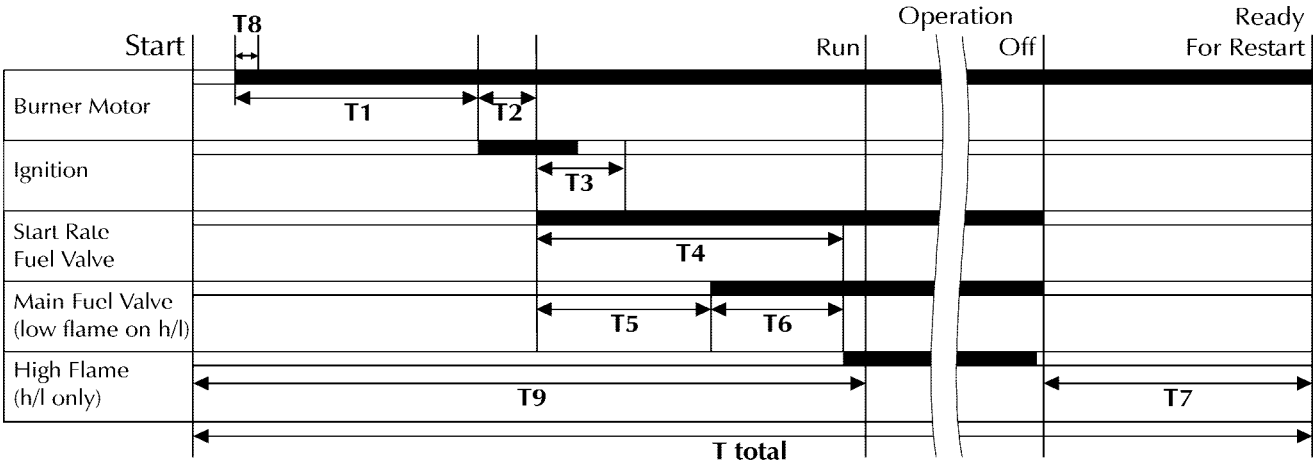

Designation	Time (seconds)		Description
	LFL 1.333	LFL 1.335	
T1	40	40	Pre-purge
T2	6	6	Pre-ignition
T3	3	5	Safety lockout time
T4	Not applicable to two stage or fully modulating operation		Delay start rate to main flame - single stage
T5	12	12	Delay start rate to main flame - multi stage
T6	12	12	Delay between main flame low & main flame high
T7	18	18	Post-purge
T8	12	12	Air pressure switch interlock
T9	91	91	Total start time
T total	106	106	Total controller cycle time

Note :

The pre-purge times shown refer to the control box only. The time taken for the air damper to move to the appropriate position will extend the total purge time up to a maximum of 157 seconds depending on the firing rate and air requirements of the appliance.

Burner Modulation Controller : Mini MM Mk. 5

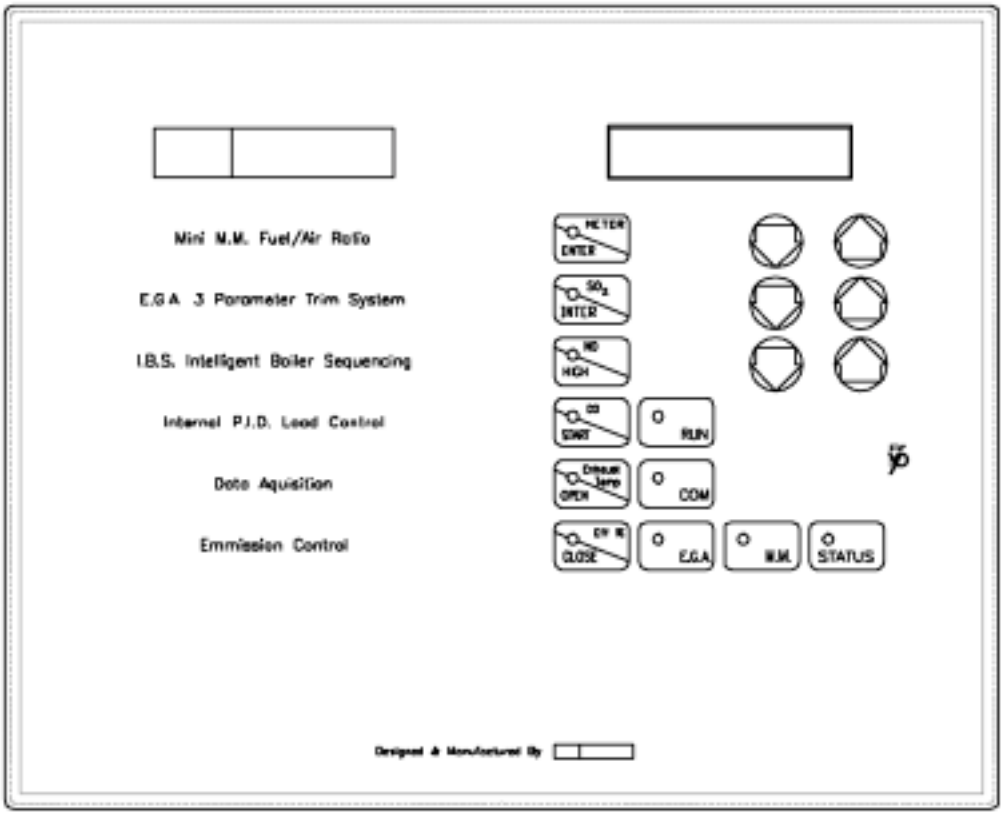

Positioning Motor

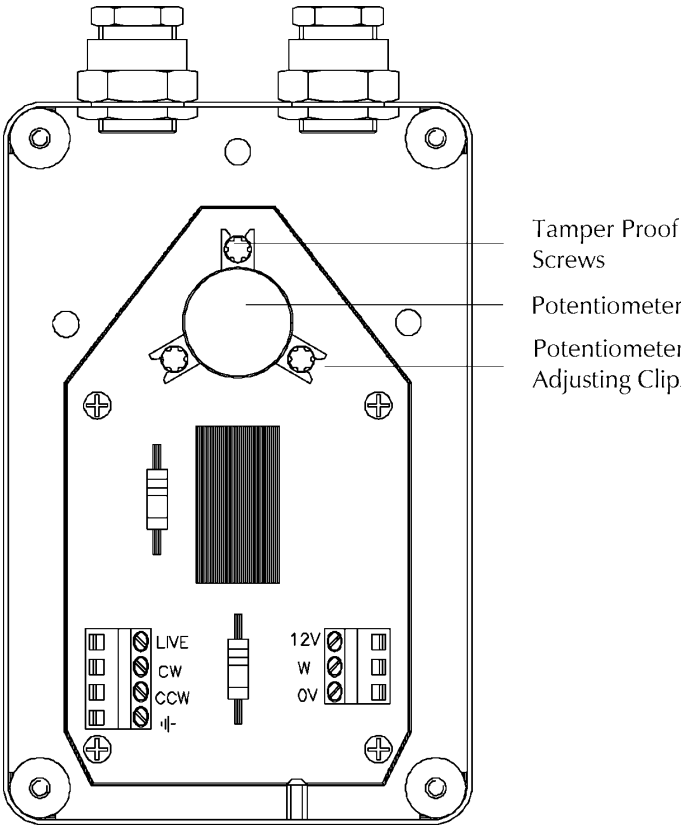

Temperature And Pressure Detector

Pressure

Pressure Sensor Notes:

1) Vibration limit : 2g from 5 Hz to 500 Hz.
2) I.P. Rating : 67, shock 50g
3) Do not touch diaphragm
4) Do not use case to tighten pressure connection
5) Cable type : 4-core screened, 16/0.2 PVC insulated overall braid PVC sheathed
6) Storage temperature -55 °C to 100 °C
7) Operating temperature -40 °C to 100 °C
8) Media temperature (steam) -40 °C to 125 °C
9) For correct operation the detector must be installed with a pressure syphon loop
10) Do not install isolation valve between detector and pressure vessel

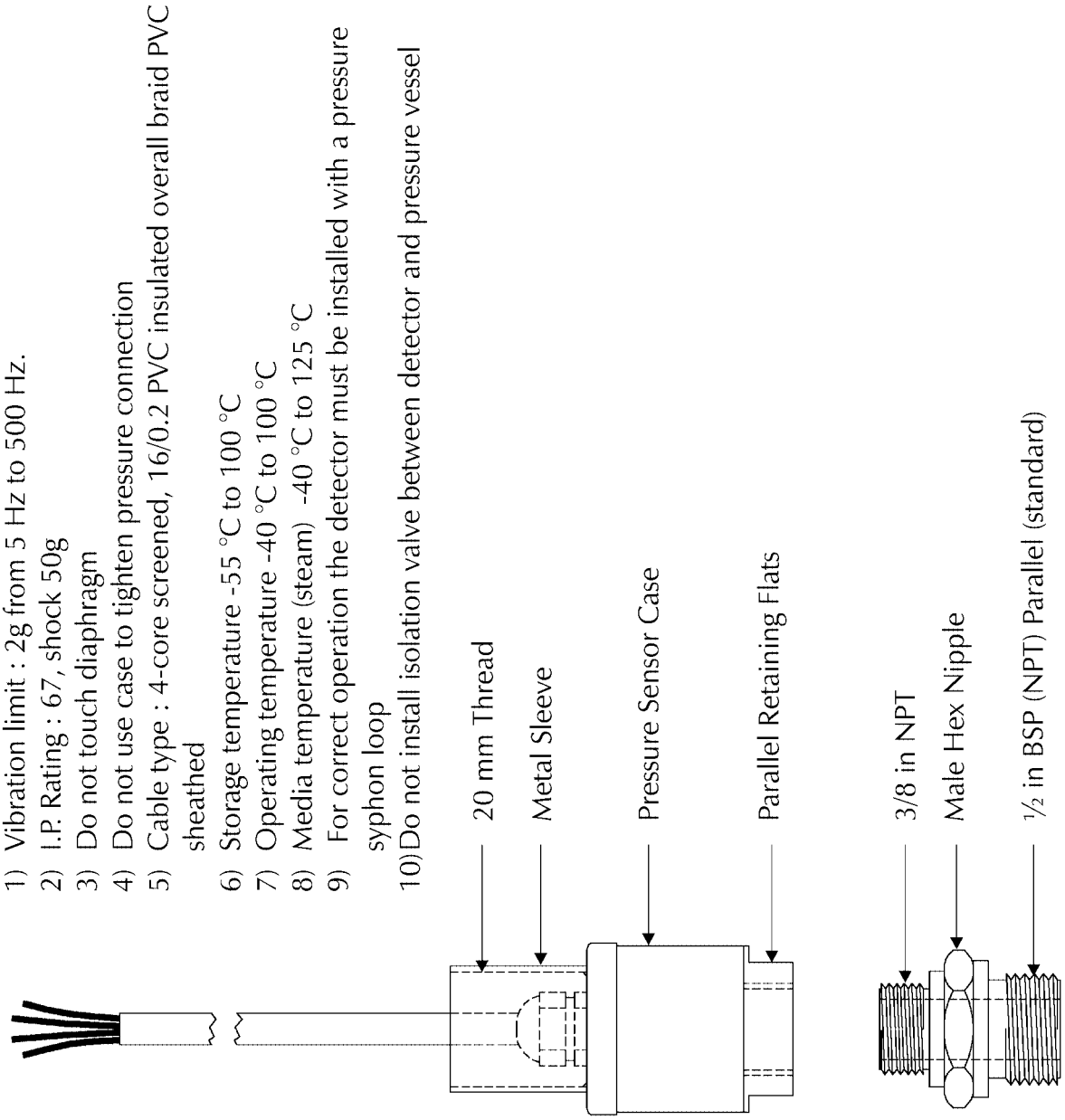

Temperature

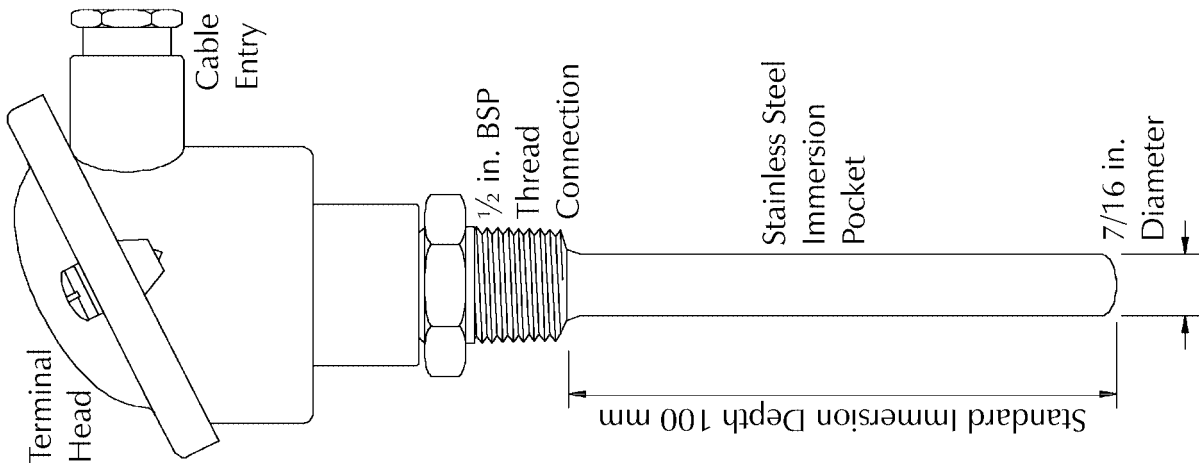

Burner Head

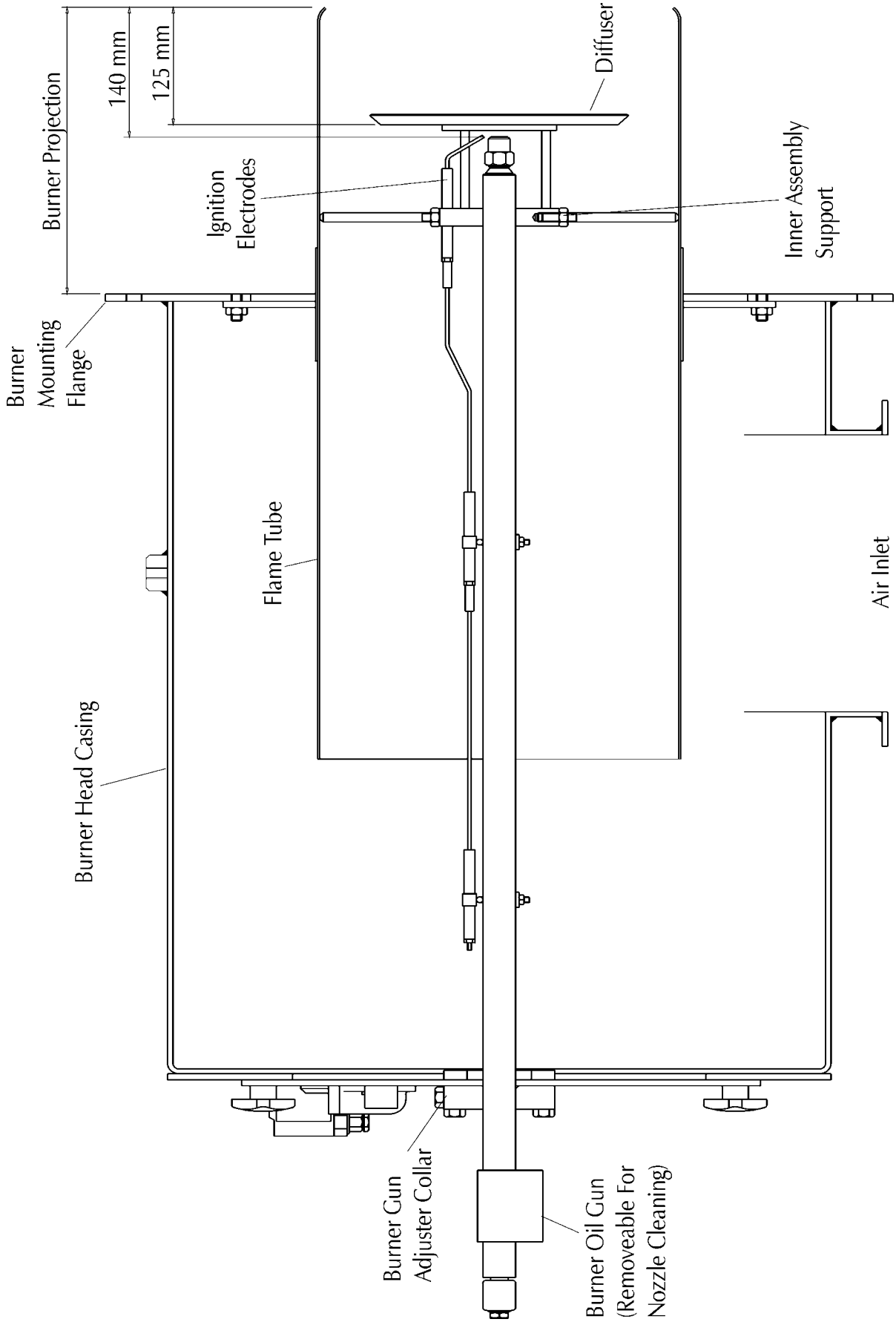
Burner Projection
140 mm
125 mm
Diffuser
Ignition Electrodes
Inner Assembly Support
Burner Mounting Flange
Flame Tube
Air Inlet
Burner Head Casing
Burner Gun Adjuster Collar
Burner Oil Gun (Removeable For Nozzle Cleaning)

Electrode Setting Detail

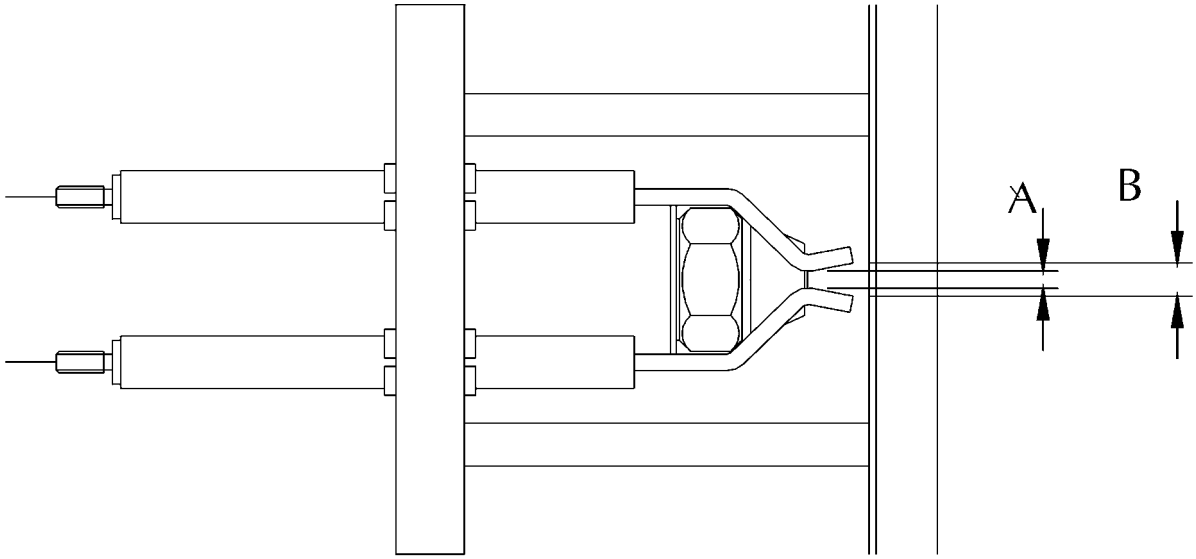

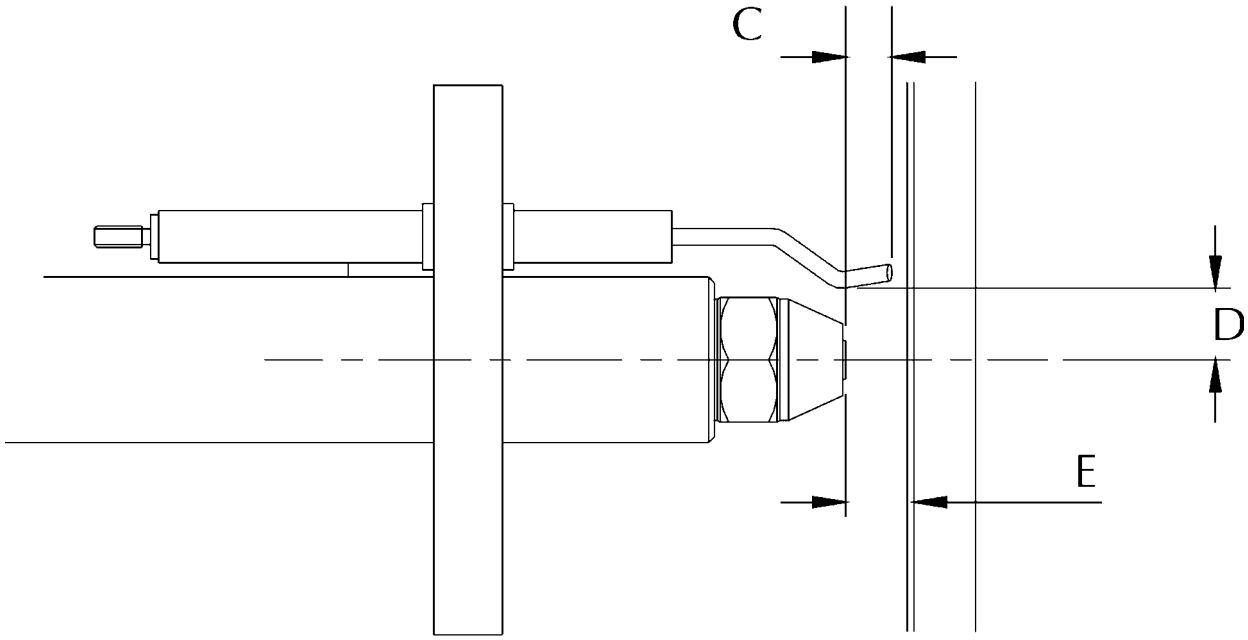

Electrode Settings	
A	3 mm
B	10 mm
C	10 mm
D	13 mm
E	15 mm

COMMISSIONING

Individual Setting Record

This manual contains a commissioning sheet (Page D.11) for essential information that should be completed by the commissioning engineer with individual details of the burner. These details should be verified periodically and changed as adjustments occur.

Safety

It is essential that commissioning be undertaken only by suitably qualified and experienced personnel. In the case of P Series Burners, commissioning engineers should be experienced in commissioning forced draught, fully modulating oil burners.

Nu-way can accept no responsibility for consequential loss, damage or injury, which results from a failure to follow the commissioning instructions provided or from commissioning procedures being undertaken by unqualified personnel.

Emergency Instructions

P Series Burners are designed and constructed to meet all applicable European Directives.

When used in accordance with the instructions provided, P Series Burners are unlikely to produce a hazardous condition. If, however, such a condition should arise in connection with the burner, the appliance or any instrument, machine or service in the vicinity of the burner, the **FUEL AND ELECTRICITY SUPPLIES SHALL BE ISOLATED IMMEDIATELY** and they shall remain isolated until the fault has been identified and rectified.

Inspection

Before commissioning is started it is important to:

- Check that the electrical wiring is complete and complies with all applicable Codes and Standards.
- Ensure that the fuses are fitted and are of the correct ratings.
- Check electrical earthing.
- Verify that the oil pipework is correctly sized and that it has been checked for leakage.
- Check that the appropriate modulating detector which is supplied loose with each burner, is fitted correctly to the appliance. (Technical Specification Pages C.17).
- Make all personnel involved in the commissioning aware of the location of the emergency oil and electricity isolation points.
- Check that the appliance's ventilation and flueing arrangements are adequate.
- Ensure that any warning notices appropriate to the commissioning procedure are in position.
- Ensure that all necessary tools and test equipment are available and ready for use. Essential items include a manometer or other approved pressure measuring instrument. The Autoflame EGA option enables the necessary flue product analyses to be made. The EGA probe must be installed and ready for use.
- Check that all relevant documentation is available, including, where appropriate:
  - The agreed plant performance specification.
  - Plant drawings and pipework layouts.
  - Electrical logic and wiring diagrams.
  - Certificates confirming satisfactory completion procedues such as soundness testing and electrical safety tests.
  - Commissioning, operating, emergency shutdown and maintenance instructions for the plant.
- Establish that the operation of plant other than that being commissioned will not have an adverse effect on the operation of the plant to be commissioned, and similarly, that the operation of the plant to be commissioned will not have an adverse effect on other plant.
- Confirm that the operation of adjacent plant and machinery will not constitute a hazard to the personnel involved in commissioning.
- Establish that the appliance is in an appropriate and safe condition to be fired; for example, that there is water in the boiler.
- Set the appliance controls to call for heat.

Initial Settings

To prepare the burner for commissioning:

1. Check that the electrical power to the control panel and to the burner is off.
2. Check and if necessary re-set the ignition electrode gaps. The burner head arrangement is shown on Technical Specification Page C.18 and the electrode details are shown on Technical Specification Page C.19 and access instructions are provided in Operation and Maintenance on Page E.3.
3. Set the air pressure switch to minimum. (This must be re-set to the desired level during commissioning).
4. Check the setting of the four residual oil thermostats (where relevant). The required values are shown in Technical Specification Page C.13.
5. Check the Autoflame set-up as follows :
   - Establish the electrical supply to the control panel.
   - Switch on the burner.
   - After a short interval (5 seconds) the COM light on the Autoflame panel begins to flash.
   - Press COM within 5 seconds (if COM is not pressed within 5 seconds the light goes off. To proceed switch the burner off and then on again and after 5 seconds the COM light comes on). The CLOSE light flashes and 'Password' appears on the display together with the values for channels 1 (CH1) and 2 (CH2). The channel 1 value appears above the channel 2 value.
   - Enter the access code 254 in the CH1 (upper) window by using the top row of UP and DOWN arrow buttons.
   - Enter the access code 01 in the CH2 (lower) window by using the second row of UP and DOWN arrow buttons.
   - Press CLOSE. The CLOSE light will become steady and the ENTER light will begin to flash. If the CLOSE light remains flashing then the controlling instruments are not calling for heat and appropriate action must be taken. The LCD panel will display the default closed positions for the fuel valve (CH1) and the air valve (CH2).
   - Enter Options Mode by pressing the UP and DOWN arrow buttons in the top row (CH1) simultaneously. 'Option' and 'Value' appear on the left hand side of the LCD display. On the right of the display is the option number and below it the numeric value. Initially the value for option 1 is displayed.
   - To verify that the unit is programmed for 'golden start' operation scroll to option 29 by using the second row of UP and DOWN arrow buttons. Check that the value displayed is '00'. If necessary adjust the displayed value by using the third row of UP and DOWN arrow buttons.
   - Press ENTER, the CLOSE light is flashing and the COM light is on.
   - Switch off the burner.
   - Switch off the electrical power to the control panel.

Dry Run

The following procedure should be followed. It is important that a complete and flawless dry run be completed before fuel is supplied to the system.

1. Check that the electrical supply to the control panel and burner are turned off.
2. Switch the burner On/Off switch to 'OFF' position.
3. Check that the oil pipework and ringmain are ready for operation.
4. Set the Hand/Auto switch on the control panel to the 'Hand' position.
5. Establish the electrical supply to the control panel. Press the sequence controller re-set button if necessary. If the sequence controller is not at its start position it will motor round to its start position and wait.

6. Ensure that the flame detection system detects the presence of a simulated flame or, where permissible an independent flame source.

   Remove the flame detector from the burner, expose the detector to a flame or simulated flame. This should cause a lockout indicated by illumination of the corresponding indicator light on the control panel.

7. Replace the flame detector in its housing in the burner. Reset the sequence controller using the 'Reset' button on the control panel.
8. Switch off the electrical power supply to the control panel and to the burner.

Live Run

General

The instructions in this section are presented as a sequence. No separate set of actions (for example, checking the flame signal) should be followed in isolation without paying particular attention to any safety precautions such as isolating the electrical supply to the burner which must precede such actions. At all stages, the operation of the burner should be checked against the programming sequence controller diagram (Technical Specification Page C.15).

Before proceeding check again that :

- The electrical wiring is complete and complies with all relevant Codes and Standards.
- All fuses are fitted, and are of the correct ratings.
- The oil supply pipework is correctly installed and has been leak tested. If, at any time during commissioning, there is a fuel leak, **FUEL AND ELECTRICITY SUPPLIES SHALL BE ISOLATED IMMEDIATELY** and the leak sealed before proceeding.
- The appliance is in an appropriate and safe condition to be fired.
- The appliance controls are set to call for heat.

Oil Supply Temperature And Pressure

Check that the temperature and pressure of the oil delivered to the burner are as stated in General Information Page B.8.

Initial Checks

1. Establish electrical supply to the control panel and switch the burner on. If the burner sequence controller is at lockout press the re-set button.
2. The fan will start.
3. Observe that the rotation of the combustion air fan is in the direction of the arrow on the fan casing. If the fan rotation is incorrect, switch off the electricity supply and take action to remedy this.
4. The burner will proceed through its ignition sequence. Check that an ignition spark is present. (If there is no spark and the burner goes to lockout the air pressure switch may require adjustment - refer to Operation and Maintenance Page E.2).
5. The ignition spark will cease and the system will go to lockout.
6. Switch off the burner and the electrical power supply to the control panel.

Establishing The Flame

1. Ensure that all the controlling instruments are calling for heat.
2. Establish the electrical supply to the control panel.
3. Switch on the burner.
4. After a short interval (5 seconds) the COM light on the Autoflame panel begins to flash.
5. Press COM within 5 seconds (if COM is not pressed within 5 seconds the light goes off. To proceed switch the burner off and then on again and after 5 seconds the COM light comes on). The CLOSE light flashes and 'Password' appears on the display together with the values for channels 1 (CH1) and 2 (CH2). The channel 1 value appears above the channel 2 value.
6. Enter the access code 254 in the CH1 (upper) window by using the top row of UP and DOWN arrow buttons.
7. Enter the access code 01 in the CH2 (lower) window by using the second row of UP and DOWN arrow buttons.
8. Set up the positioning motors to the fully closed positions as follows:

- Press CLOSE. The CLOSE light will become steady and the ENTER light will begin to flash. If the CLOSE light remains flashing then the controlling instruments are not calling for heat and appropriate action must be taken. The LCD panel will display the default closed positions for the fuel valve (CH1) and the air valve (CH2).
- Enter 0.0 in the CH1 window by using the top row of UP and DOWN arrow buttons.
- Enter 0.0 in the CH2 window by using the second row of UP and DOWN arrow buttons.
- Press ENTER. The OPEN light will begin to flash.

9. Set up the positioning motors to the fully open positions as follows:
   - Press OPEN. The OPEN light will become steady and the ENTER light will begin to flash.
   - Enter 90.0 in the CH1 and CH2 windows by using the UP and DOWN arrow buttons.
   - Press ENTER. The START light will begin to flash.

10 Set up the positioning motors to the initial ignition positions as follows:
   - Press START. The START light will become steady and the ENTER light will begin to flash.
   - Enter a start position in the CH1 and CH2 windows by using the UP and DOWN arrow buttons. This start position is only to ignite the burner initially and does not have to be clean combustion. A good starting point might be 20.0 for the fuel position (CH1) and 10.0 for the air valve position (CH2). These values may have to be adjusted to achieve ignition.

11. **Warning - From this point onwards the ignition sequence will be initiated and fuel will be admitted to the burner. Care must be exercised.**

12. Begin the ignition sequence by pressing ENTER. The START light will begin to flash again.

    The burner should proceed through the start-up sequence and ignite at the valve positions set in Step 12 above. If the burner fails to ignite or ignition is unstable then switch off the burner and repeat the procedure from step 1, using modified CH1 and/or CH2 START values as set in step 12.

13. The burner is firing with the initial arbitrary start valve positions which are not memorised. To set the memorised positions for subsequent ignitions under normal operation, adjust the 'golden start' valve positions as follows :
    - Press START
    - Adjust the fuel (CH1) and air (CH2) valve positions using the corresponding UP and DOWN arrow buttons to give the optimum start flame.
    - Press ENTER - the start flame settings are now memorised and the HIGH light will begin to flash.

14. With the burner running at start rate, prepare the controller for transition to high flame by pressing HIGH. The HIGH light will become steady, and the EGA light will begin to flash. No changes to the valve positions will occur at this time.

17. Press EGA. The display will show the exhaust gas analysis and temperature. The EGA and MM buttons toggle the display between the exhaust analysis and the valve positions. Press MM to return to the valve position display.

18. Slowly modulate the burner to high flame by small adjustments to the valve positions (CH1 for fuel and CH2 for air) using the corresponding UP and DOWN arrow buttons.

    Warning - the transition to high flame should be at a rate consistent with the requirements of the boiler, taking into account the starting temperature and pressure. If in doubt refer to the boiler manufacturer.

    During the transition to high flame :
    - Monitor the firing rate by observing the spill pressure .
    - Monitor the exhaust gas analysis by toggling between EGA and MM buttons.

Continue increasing the firing rate until the appropriate spill pressure is achieved.

17. Check that the combustion is clean. If the CO_2 is too low, press MM and slowly decrease the air valve position by using the CH2 DOWN arrow button to give the correct CO_2. If the CO_2 is too high, press MM and slowly increase air valve position by adjusting the CH2 UP arrow button to give the correct CO_2. Check that the spill pressure is still correct for high flame and adjust the fuel valve position (CH1) if necessary.
18. Toggle to EGA mode if necessary by pressing EGA. The ENTER light will begin to flash.
29. Press ENTER. Wait until the INTER light flashes. This will take a few minutes as the system carries out the 'Auto Commission' routine.
20 Press INTER. The INTER light will become steady and the EGA light will begin to flash.
21 Reduce the air and fuel valve positions using the corrresponding DOWN arrow buttons.
22. Press EGA.
23. Check that the combustion is clean. If the CO_2 is too low, press MM and slowly increase the fuel valve position by using the CH1 UP button to give the correct CO_2. If the CO_2 is too high, press MM and slowly increase the air valve position by adjusting the CH2 UP button to give the correct CO_2.
24. Toggle to EGA mode if necessary by pressing EGA. The ENTER light will begin to flash.
25. Store this intermediate position by pressing ENTER. Wait until the INTER light flashes. This will take a few minutes as the system carries out the 'Auto Commission' routine.
26. Repeat from step 22 until you consider enough INTER positions have been entered and the START light is flashing.
27. Press START. The START light will become steady and the EGA light will begin to flash.
28. Reduce the air and fuel valve positions to the low flame settings using the DOWN buttons.
29. Press EGA.
30. Check that the combustion is clean. If the CO_2 is too low, press MM and slowly increase the fuel valve position by using the CH1 UP button to give the correct CO_2. If the CO_2 is too high, press MM and slowly increase the air valve position by adjusting the CH2 UP button to give the correct CO_2.
31. Press ENTER. Wait until the RUN light flashes. This will take a few minutes as the system carries out the 'Auto Commission' routine.
32. Press RUN.
33. Switch off the burner and the electrical power supply to the control panel.

Final Commissioning Stages

Checking The Flame Signal

1. Check that electrical power is off.
2. Open the 'Terminal/Ignitor Box Unit' panel and disconnect the wire from terminal 20.
3. Connect a DC micro-ammeter between terminal 20 and the wire that has been taken from terminal 20.
4. Establish the electrical supply and switch on the burner. Allow the burner to light and operate normally.
5. Observe the reading on the micro-ammeter at all firing levels including start rate. A steady reading in excess of 7 microamps is satisfactory. Lower readings may cause intermittent burner lock-out and indicate a need for adjustment of the burner settings - refer to Section E, Operation and Maintenance.
6. Switch off the burner and the electrical power supply to the burner. Disconnect the micro-ammeter and replace the wire in terminal 20.
7. Close the 'Terminal/Ignitor Box Unit' panel.

Setting The Air Pressure Switch

1. Check that the electrical supply to the control panel off and that the burner is off.
2. Remove the air pressure switch cover.
3. Fit a manometer or other approved pressure measuring instrument to the pressure switch so that the actual measured air pressure can be compared to the pressure switch dial setting.
4. Switch on electrical supply to the control panel. Switch on the burner, allow the burner to proceed through its sequence until it is operating at low flame.
5. Slowly turn the adjusting dial on the air pressure switch clockwise until the flame is extinguished.
6. The burner will go to lock-out.

7. Turn the dial one division anti-clockwise and re-set burner lock-out. The burner will then continue through its cycle until either the start rate flame is established or burner goes to its lock-out position.

   If the burner goes to lock-out, repeat the procedure (turning the dial one division) once per burner cycle until start rate flame is established.
8. Allow the burner to cycle to low flame and then turn the adjusting dial a further two divisions anti-clockwise.
9. Switch off electrical supply to the control panel and to the burner.
10. Replace the air pressure switch cover.
11. Remove the pressure measuring equipment.

Set-Point Adjustment

To enter or edit the controller set-point, which is also known as the 'Required Value' (Re), follow the procedure below :

1. Establish the electrical power supply to the control panel.
2. Select the either fuel with the fuel selector switch on the control panel.
3 Ensure that the oil supply is operational at the correct temperature and pressure
4. Switch on the burner. The burner will go through the ignition sequence and be released to modulation under the control of the burner controller.
5. Press the STATUS button on the microprocessor control panel and use the bottom row of UP and DOWN arrow buttons to adjust the Re value in the display.

   The range of adjustment of the required value is limited by the type of sensor being used.

   The burner will now operate normally until :
   - It is switched off by the appliance controls
   - It is switched off manually
   - There is an electrical power failure. In this event the burner will restart and run normally whuen power is restored. No manual intervention is required.
   - A failure in any of the safety functions monitored by the sequence controller.

Final Checks

1. Check that all covers have been replaced and that all locking devices are secure.
2. Check the operation of the appliance control instruments and safety interlocks.
3. Ensure that the appliance safety controls and any other interlocks are set to safe limits.
4. **COMMISSIONING OF THE BURNER IS NOW COMPLETE.**

On Completing Commissioning

When commissioning has been completed satisfactorily the commissioning engineer shall prepare a report, which shall contain the following:

1. Details of any modifications made to the system, together with revised drawings if necessary.
2. Customer and plant details, including any serial numbers.
3. Operating levels and settings, including flue gas analysis information.

This report shall be passed to the person responsible for the plant. This responsible person shall ensure that:

1. All personnel concerned with operating, supervising and maintaining the plant receive instruction covering:
   - The way in which the plant operates and the locations and functions of the plant's safety systems.
   - The correct light-up and shutdown procedures.
   - Adjustment of operating variables.
   - Checking of plant interlocks.
   - The plant's maintenance requirements.
   - The actions to be taken in the event of a fault condition.
2. Clear light-up and shutdown procedures are displayed on the plant and that the pipes, valves and switches involved are clearly marked.
3. **CLEAR AND CONCISE EMERGENCY SHUTDOWN PROCEDURES ARE DISPLAYED.**

The details below are to to be completed by the Commissioning Engineer. The completed sheet must then be photocopied and a copy forwarded to the appliance manufacturer.

Oil Commissioning Sheet Page 1 : Plant Details

Installer's Name :

Address :

Site Address :

Appliance	Type :	Size :	Serial No. :
Burner	Type :	Size :	Serial No. :

Commissioning Date :

Guarantee Expiry Date :

Fuel Oil Type :

Oil pressure upstream of pump :

Standing [ ] bar or psi Running [ ] bar or psi

Comments :

The details below are to to be completed by the Commissioning Engineer. The completed sheet must then be photocopied and a copy forwarded to the appliance manufacturer.

Oil Commissioning Sheet Page 2 : Performance Details

Firing Rate		High Fire	Intermediate Positions (A maximumof 15 intermediate positions can be entered, in practice 10 are normally sufficient)																Low Fire	Units[1]
Pressure at burner	Oil																			bar or psi
	Air																			mbar or ins w.g.
Comb. Chamber Pressue																				mbar or ins w.g.
Oil rate																				kg/h or lb/h
Heat input																				MW, MJ/h or Btu/h
Autoflame MM Mk.6 Settings	CH1																			
	CH2																			
	CH5																			
O_2																				% Dry Basis
CO_2																				% Dry Basis
CO																				ppm Dry Basis
Flue Temp.																				°C or °F
Ambient Temp.																				°C or °F
Temp. Difference																				°C or °F
Efficiency																				%

[1] Note : Where a choice of measurement units is shown, delete those not applicable

Comments :

E : Operation And Maintenance

Normal Operation

Automatic Modulation

1. Establish the electrical power supply to the control panel.
2 Ensure that the oil supply is operational at the correct temperature and pressure
3. Switch on the burner. The burner will go through the ignition sequence and be released to modulation under the control of the Autoflame Mini MM Mk.5

   The burner will now operate normally until :

   - It is switched off by the appliance controls
   - It is switched off manually
   - There is an elevtrical power failure. In this event the burner will restart and run normally whuen power is restored. No manual intervention is required.
   - A failure in any of the safety functions monitored by the sequence controller.

Routine Safety Checks

THESE CHECKS SHOULD BE CARRIED OUT ONLY BY APPROPRIATELY QUALIFIED AND EXPERIENCED PERSONNEL

Combustion Air

Check that the plant room is well ventilated at all times and inspect the burner air inlet frequently to ensure that there is no obstruction to the air flow.

Flame Detector

1 Switch off the burner and the electrical supply to the control panel
2 Remove the UV cell from the burner casing and cover the quartz glass envelope to exclude light. Care should be taken not to touch the glass.
3 Establish the electrical supply to the control panel and switch on the burner. The burner should go to lockout at the end of the ignition cycle.
4 Switch off the burner and the electrical power supply to the burner. Replace the UV cell. Establish the electrical supply to the burner and switch on the burner. Reset the lockout.

Combustion Air Pressure Switch

1. Check that the electrical supply to the control panel off and that the burner is off.
2. Remove the air pressure switch cover.
3. Fit a manometer or other approved pressure measuring instrument to the pressure switch so that the actual measured air pressure can be compared to the pressure switch dial setting.
4. Switch on electrical supply to the control panel. Switch on the burner, allow the burner to proceed through its sequence until it is operating at low flame.
5. Slowly turn the adjusting dial on the air pressure switch clockwise until the flame is extinguished.
6. The burner will go to lock-out.
7. Turn the dial one division anti-clockwise and re-set burner lock-out. The burner will then continue through its cycle until either the start rate flame is established or burner goes to its lock-out position.

   If the burner goes to lock-out, repeat the procedure (turning the dial one division) once per burner cycle until start rate flame is established.
8. Allow the burner to cycle to low flame and then turn the adjusting dial a further two divisions anti-clockwise.
9. Switch off electrical supply to the control panel and to the burner
10. Replace the air pressure switch cover.
11. Remove the pressure measuring equipment.

Routine Maintenance

ALWAYS SWITCH OFF THE ELECTRICAL POWER AND FUEL SUPPLIES TO THE BURNER BEFORE CARRYING OUT MAINTENANCE.

Combustion Air Fan

Access the fan blades as follows:

1 Remove the ring of nuts on the air inlet side of the fan unit
2 Remove the plate containing the air inlet.

Clean the fan blades with a stiff brush, taking care not to damage them. Inspect the burner air inlet and ensure that there is no obstruction to the air flow.

Replace the plate and retaining nuts.

Burner Inner Assembly

Air Diffuser

Remove the burner air diffuser plate for inspection and cleaning as follows: -

1 Remove the UV cell from its holder and secure to a safe place.

2. Fit the three guide rods through the sockets on the front plate.

3 Loosen and remove the 4 nuts and washers securing the backplate to the burner casing.

4 Pull the backplate assembly rearwards, guiding the inner tube until the diffuser is clear of the burner head casing

5 Clean the diffuser of any deposits using a stiff brush.

Ignition Electrodes

Clean and check the electrodes are not cracked or worn. Renew if necessary.

Check the settings of the ignition electrodes and reset if necessary, details are shown on Page C.19.

Oil Nozzle

Remove the oil nozzle, dismantle it and wash the internal filter and other components in a suitable solvent. Remove any remaining deposits with a clean, lint-free cloth. The oil nozzle should be replaced after 2000 hours operation.

Re-assemble the inner assemblies in reverse order. Replace all covers and secure all fittings. The burner is now ready for operation and remove the guide rods. Switch on the electrical and fuel supplies to the burner.

Oil Filters

The oil filter located on top of the preheater should be removed and cleaned in paraffin or another suitable solvent.

SAFETY WARNING : CLASS 'G' OIL BURNERS OPERATE WITH OIL AT 140°C FOR ATOMISATION. THE BURNER SYSTEM SHOULD BE TAKEN OFF LINE AND ALLOWED TO COOL BEFORE ATTEMPTING THESE TASKS.

In the case of the cold oil filter, remove the plug from the sump and drain off any sludge and/or water present at six-weekly intervals. The cleaning knob on this filter should be rotated daily. If the filter fitted in the oil supply line has a disposable element this should be replaced at least once a year, more frequently if this is dictated by the condition of the fuel or other local conditions. If the filter element is re-usable it should be cleaned at appropriate intervals. After filter cleaning operations it will be necessary to remove air from the system by bleeding the pump.

Oil Preheater

Regular checks should be made to ensure that the oil temperature is maintained at the correct level (refer to the table on Page B.8).

FAULT FINDING

Any changes made in control settings as a result of identifying and remedying fault conditions as described below may necessitate partial or complete recommissioning. Recommissioning shall be undertaken only by appropriately qualified and experienced personnel.

Error Checking, Fault Analysis & Identification Codes

The "Error Checking" software, which is included in every MM/EGA module, continually interrogates the system for component or data handling failure. This intensive self-checking program is inflicted on all peripherals such as positioning motors and load detectors as well as the main MM system hardware.

Any error identified by the system is indicated by "ERROR" being displayed with the relevant error number.

A full list of error codes is described in section 2.3.1 of the MM Technical Manual that accompanies this handbook.

Incorrect Rotation of the Fan Motor

The fan motor rotates in the direction of the arrow printed on the Nu-way nameplate mounted on the fan casing. If the direction of rotation is incorrect, interchange any two phases.

Fan Motor Fails To Start

Check that :

- The electricity supply is available

- The burner is correctly wired
- The fuses are correctly sized and not blown
- The motor overload is not tripped
- The burner controller is not locked out
- The appliance controls are calling for heat
- The oil preheater thermostats and oil temperature

Fan Motor Starts And Burner Goes To Lockout

If there is no ignition spark check that:

- The combustion air pressure sensor setting is correct
- The ignition electrodes are in good condition and correctly set
- The HT lead is not disconnected or damaged
- The ignition transformer is not faulty
- The burner controller is not faulty

If there is an ignition spark but no start flame check

- The oil supply to the burner
- The oil pump
    - The pump
    - The pump coupling
    - The pump drive motor
- The oil presssure and temperature are in accordance with the values in the Table on Page B.8
- The oil valve(s) have opened at the appropriate time in the sequence
- The filters are clear
- The nozzle is clear
- There is no carbon on the diffuser

Start Flame Failure

Failure of the start flame during the start flame proving period will cause the MM Mk.5 controller to go to lockout. If this occurs check that:

- The glass envelope on the U.V. Cell is clean and correctly orientated (it must face towards the flame)
- The UV Cell and wiring are not faulty
- The flame detector current is adequate and stable.
- The burner controller is not faulty
- The nozzle is clear
- There is no carbon on the diffuser
- There is sufficient fuel under ignition conditions to enable the flame to be detected adequately

Main Flame Is Not Established

Check that:

- The fuel pressure and flow rate are adequate
- The fuel valves are open at the appropriate time in the sequence
- The manual isolation valves are open fully and there are no partial blockages in the control train
- The MM Mk.5 controller is set-up and commissioned correctly and is fault free.

Fan Motor Only Runs Continuously

Check that:

- The air valve positioning motor is correctly wired and working

Spare Parts

For spare parts contact Nu-way's Parts And Components Division at the address and telephone number listed on the rear cover of this manual. To avoid delays, please provide the burner model and serial numbers.

Burner Service Record

This sheet to be completed and signed by the Service Engineer following each service / adjustment

Date	Details Of Service	Signature

Date	Details Of Service	Signature

Date	Details Of Service	Signature

NOTES

NOTES

NOTES

NOTES

Enertech Limited,
P O Box 1,
Vines Lane
Droitwich,
Worcestershire,
WR9 8NA

Tel: +44 (0) 1905 794331 **Fax:** +44 (0) 1905 794017
Email: info@nu-way.co.uk **Web:** www.nu-way.co.uk

NU-WAY®
Enertech Group