ENERGY SOLUTIONS

MGN 190 TIL
Gas Burner

Installation & Maintenance Manual

NU-WAY®
Enertech Group

Thank you for choosing a Nu-way burner. As you would expect from a Company who has a pedigree of more than 75 years in the heating industry, our after sales service is second to none.

Your relationship with Nu-way does not stop with the purchase of a burner. We have a team of highly experienced Service Engineers who travel throughout the UK and around the world, to service and react swiftly to breakdowns. Preventative maintenance is clearly the most cost effective way of ensuring that the burner is running at its most efficient, but also that business critical activities are not interupted with potentially costly breakdowns. A Nu-way Service contract is a cost effective way of ensuring the correct and most efficient output and reliability from your Nu-way burner is maintained at all times.

Nu-way Spares Department carry more than four thousand spares, all of which are available from stock at competitive prices. Nu-way has the largest range of commercial spares available to the market. Our Spares sales team collectively have more than 170 years employment with Nu-way and are therefore more than experienced in offering advice and practical backup, by ensuring the correct part is identified and despatched in a timely manner.

In addition to these departments we also offer a dedicated technical helpline which is manned during office hours. (Please note this is a premium rate line)

The Nu-way promise is that your investment in a Nu-way burner is fully supported throughout the life of the product.

Please call us to discuss how we can ensure you benefit from the many services we have to offer.

Burner Sales:	**01905 791640**
Service:	**01905 791680**
Spares:	**01905 791650**
Technical Helpline:	**To be advised**

DESCRIPTION

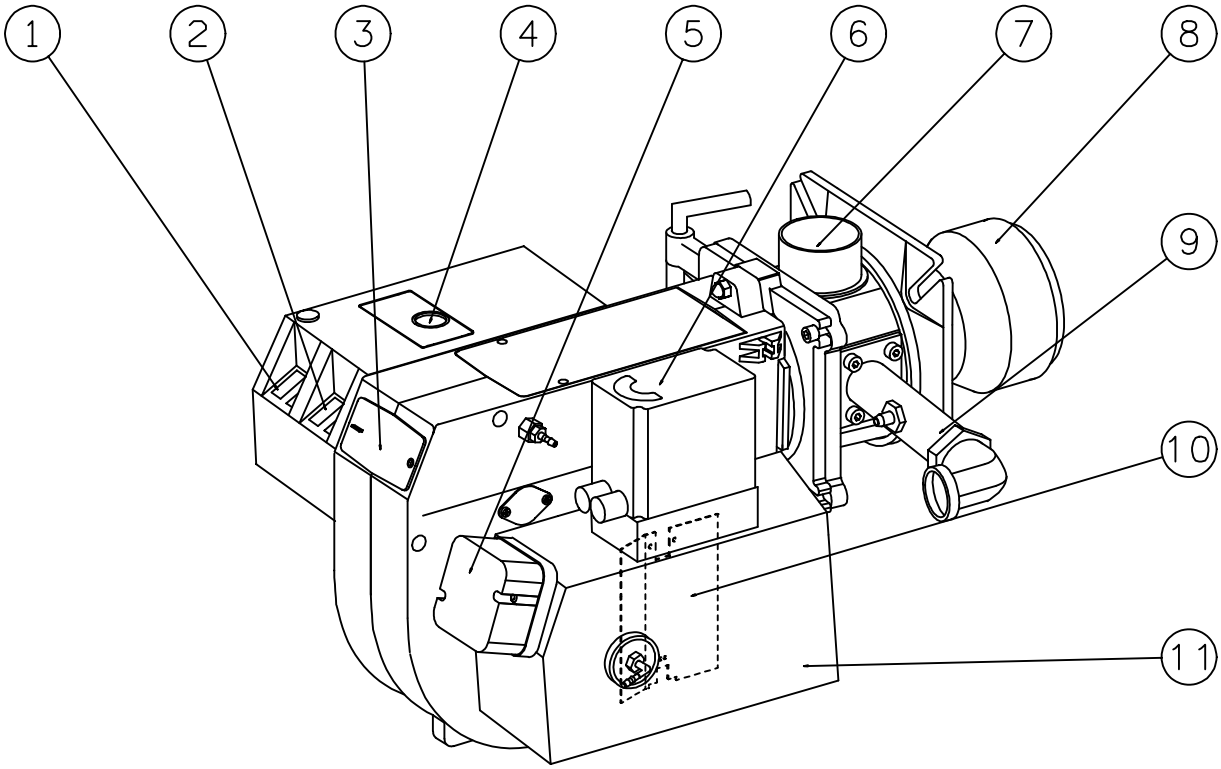

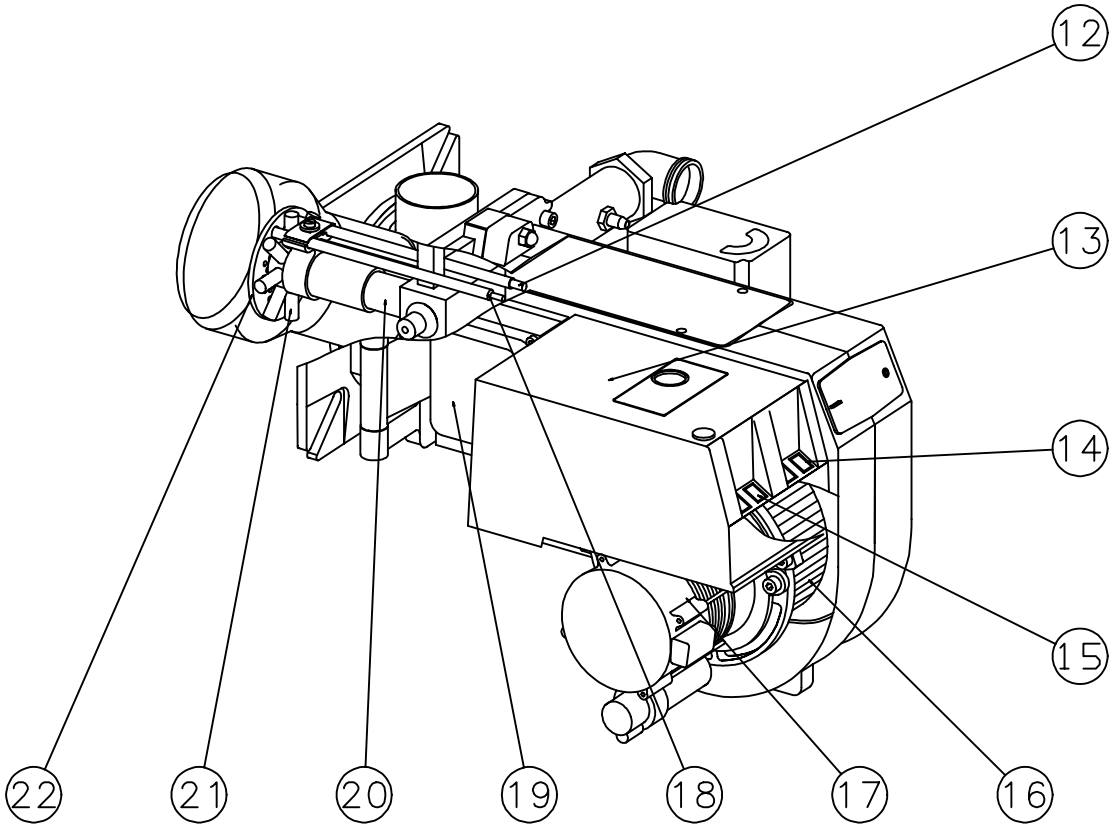

COMPONENTS

1. Switch 0-1
2. Switch I-II
3. Cover, inspection glass
4. Reset button
5. Air pressure switch
6. Damper motor
7. Inner assembly adjustment (not town gas)
8. Flame cone
9. Connection gas fittings
10. Air damper
11. Air intake
12. Ignition electrode
13. Electric panel
14. Indicating lamp Stage 2
15. Indicating lamp Stage 1
16. Fan wheel
17. Motor
18. Ionization electrode
19. Transformer
20. Inner assembly
21. Nozzle
22. Brake plate

TECHNICAL DATA

DIMENSIONS

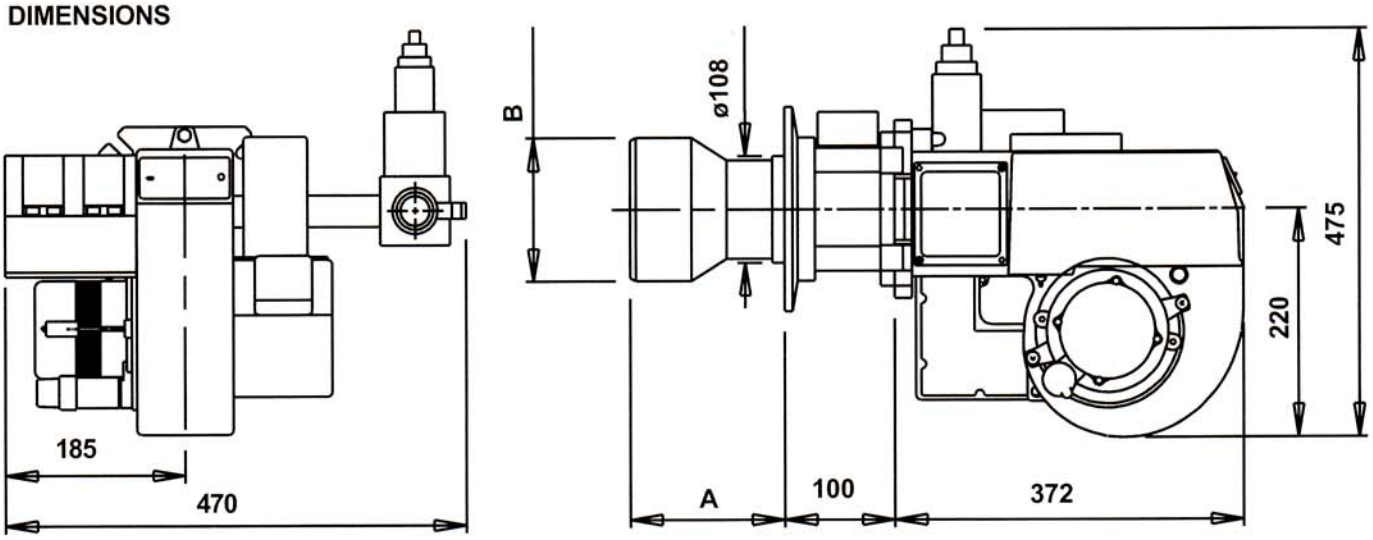

	Length of burner tube	Meassure A	Measure B
Standard	145	125	ø120
Long design	245	225	ø120
Town gas	125	105	ø120
Town gas	172	155	ø140

The above dimensions are max. measurements. Depending on the components used, the measurements may vary.

OUTPUT RANGE

Type	Capacity kW	Gas volume at a min. ouput Nm^3/h [1])	Gas volume at a max output Nm^3/h [1])	Max. Inlet pressure mbar	Rated inlet pressures mbar
300	Natural gas/LPG 60-190 [2]) Town gas	Natural gas LPG 6 2,3 (4,6 kg/h) [2]) Town gas	Natural gas LPG 19 7,3 (14,8 kg/h) [2]) Town gas	100	Natural gas LPG 20 20 [2]) Town gas

Gas fittings[2])	Motor	Ignition transformer
Natural gas LPG 1" [2]) Town gas	1-phase, 0,18 kW, 2 800 r/m, 230 V	Primary 230 V, 1 A Secondary 8 000 V

[1]) Calorific value:
Natural gas 10 kWh/Nm^3
LPG 26 kWh/Nm^3

[2]) Dimension and capacity depending on gas quality and available pressure

CAPACITY CHART ACCORDING TO EN 676

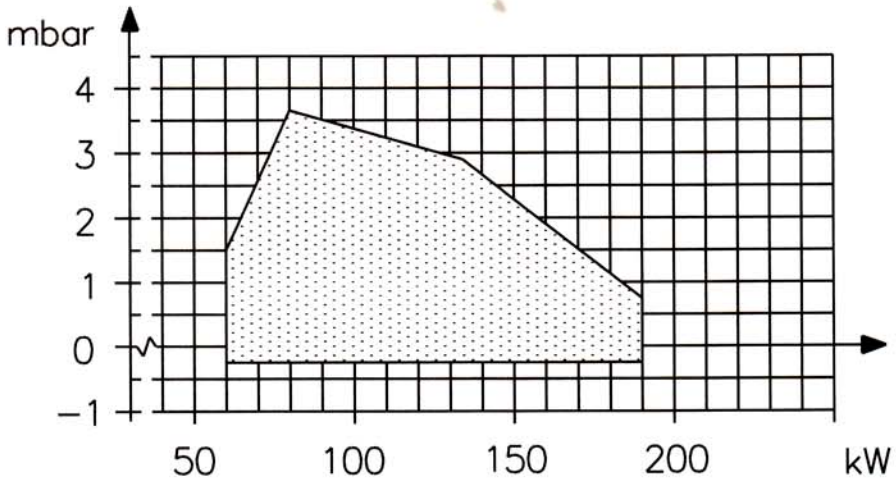

TECHNICAL DATA

DIMENSIONS OF FLANGE

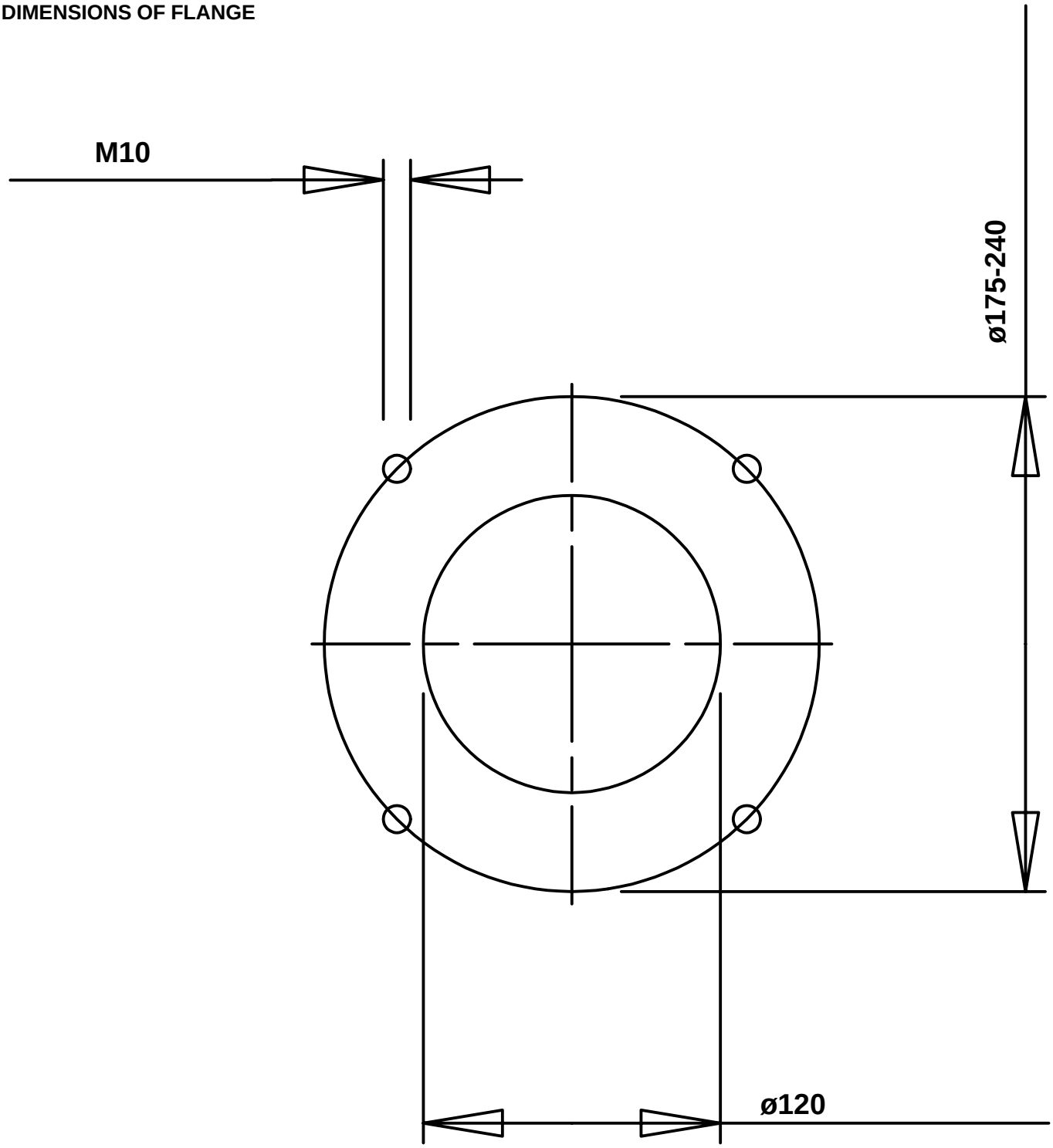

SKELETON DIAGRAMS, 2-STAGE- OR MODULATING BURNERS

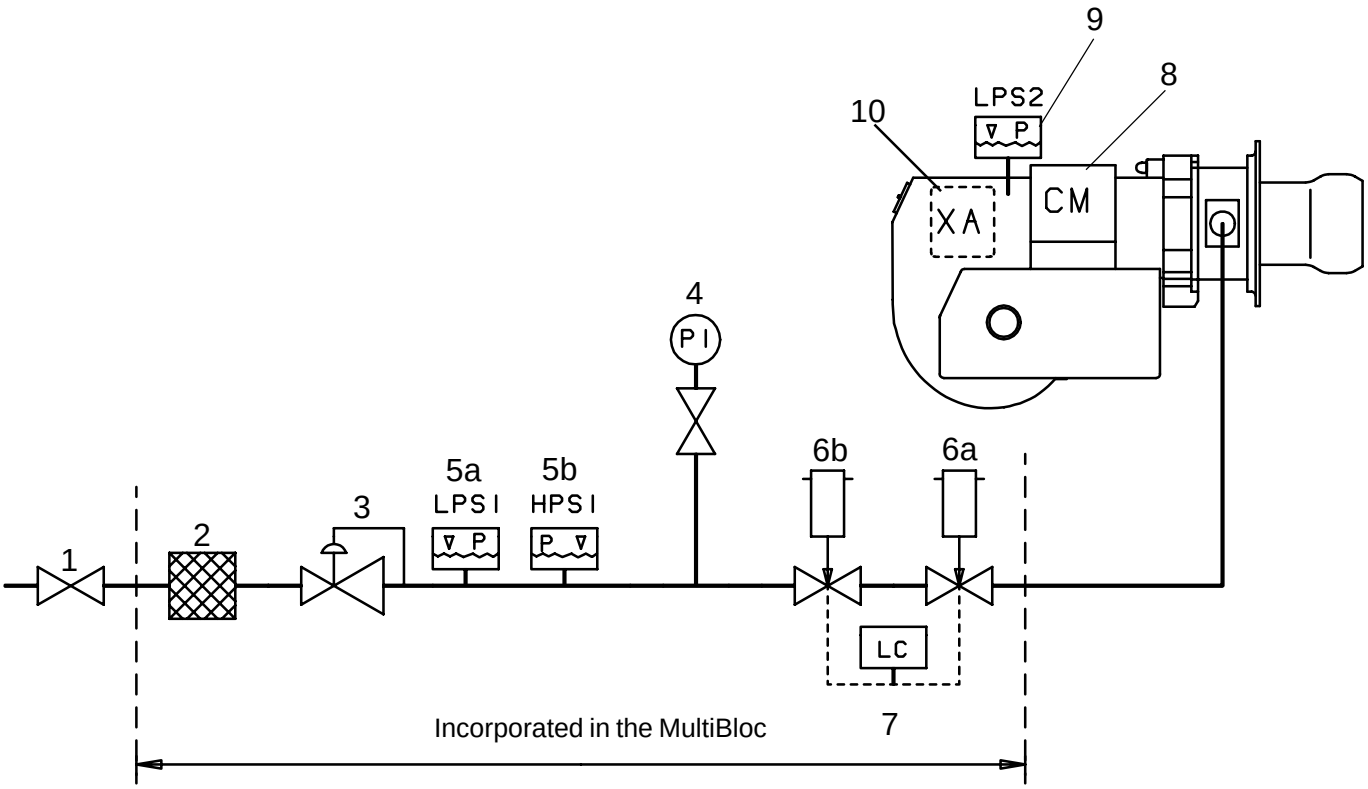

1. Ball valve
2. Filter
3. Governor
4. Pressure gauge with shut-off cock

5a. Gas pressure switch, mini
5b. Gas pressure switch, maxi
6a. Main valve, 2 -stage. When modulating operation is required this valve is equipped with controls for variable opening.
6b. Safety valve
[1)] 7. Valve proving system
8. Air damper motor
9. Air pressure switch
10. Gas burner control

Pos. 5b, 7: Components not required according to EN 676.

[1)] Required over 1200 kW according to EN 676.

When Bio gas is used, Bentone AB shall always be contacted.

MOUNTING ON THE BOILER

Remove the combustion unit from the burner. Fit the enclosed flange and gasket to the boiler.If new fixing holes must be drilled, use the fixing flange as a pattern.

REMOVAL OF VALVE UNIT FROM BURNER

Remove the plug-in contact from the multi-bloc. Loosen the union nut.

REMOVAL OF FAN HOUSE UNIT FROM BURNER.

Loosen the screws. Swing out the fan house. Remove the ionisation and ignition cables from the electrodes. Remove the bolt on the flange.

INSTALLATION EXAMPLE

Connect the gas to the burner by means of the ball valve. Ensure that the union nut, ball valve and tubing make it easy to remove the burner for inspection and service.

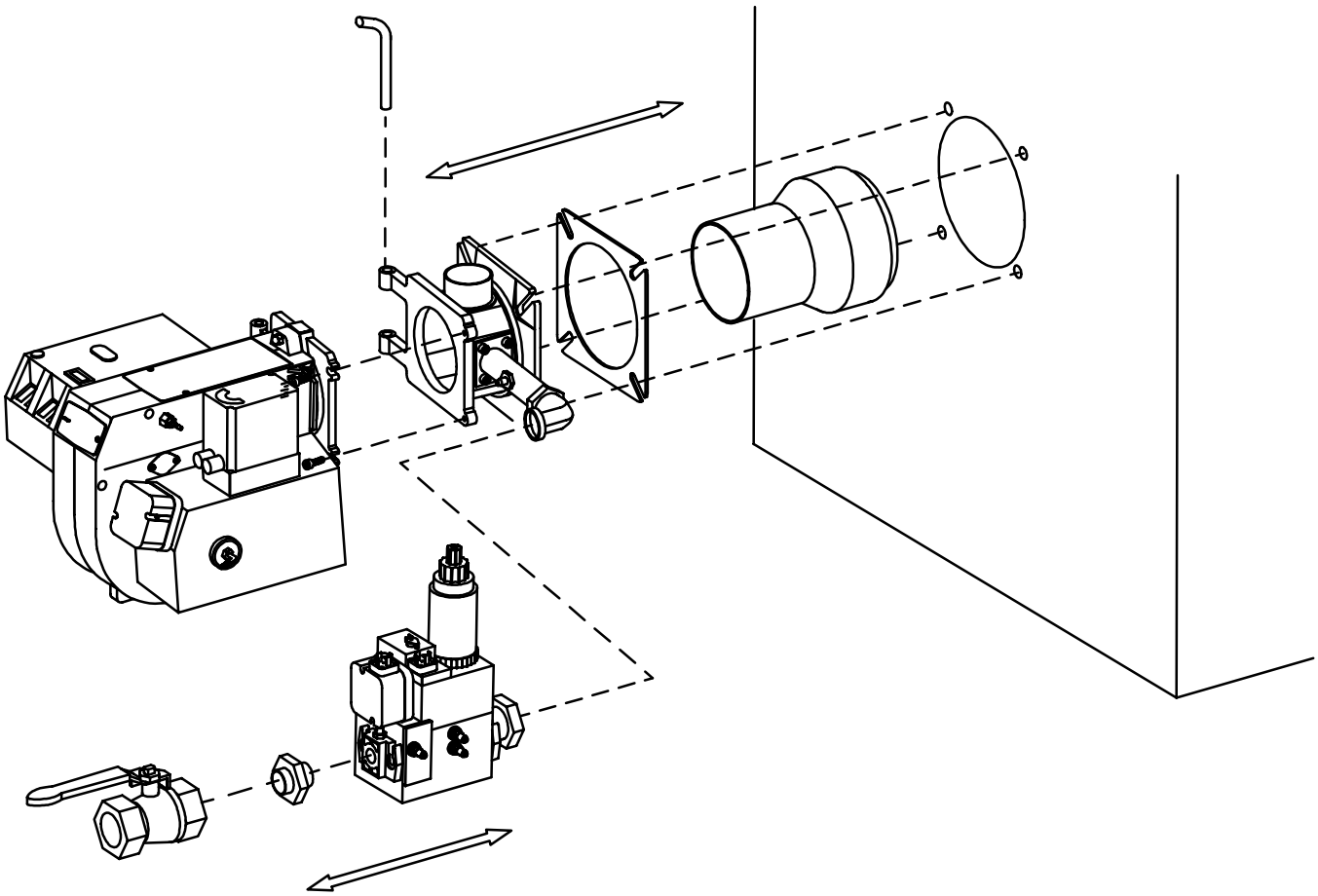

ELECTRIC EQUIPMENT

GAS BURNER CONTROL: LMG22.../LGB22...

WIRING DIAGRAM

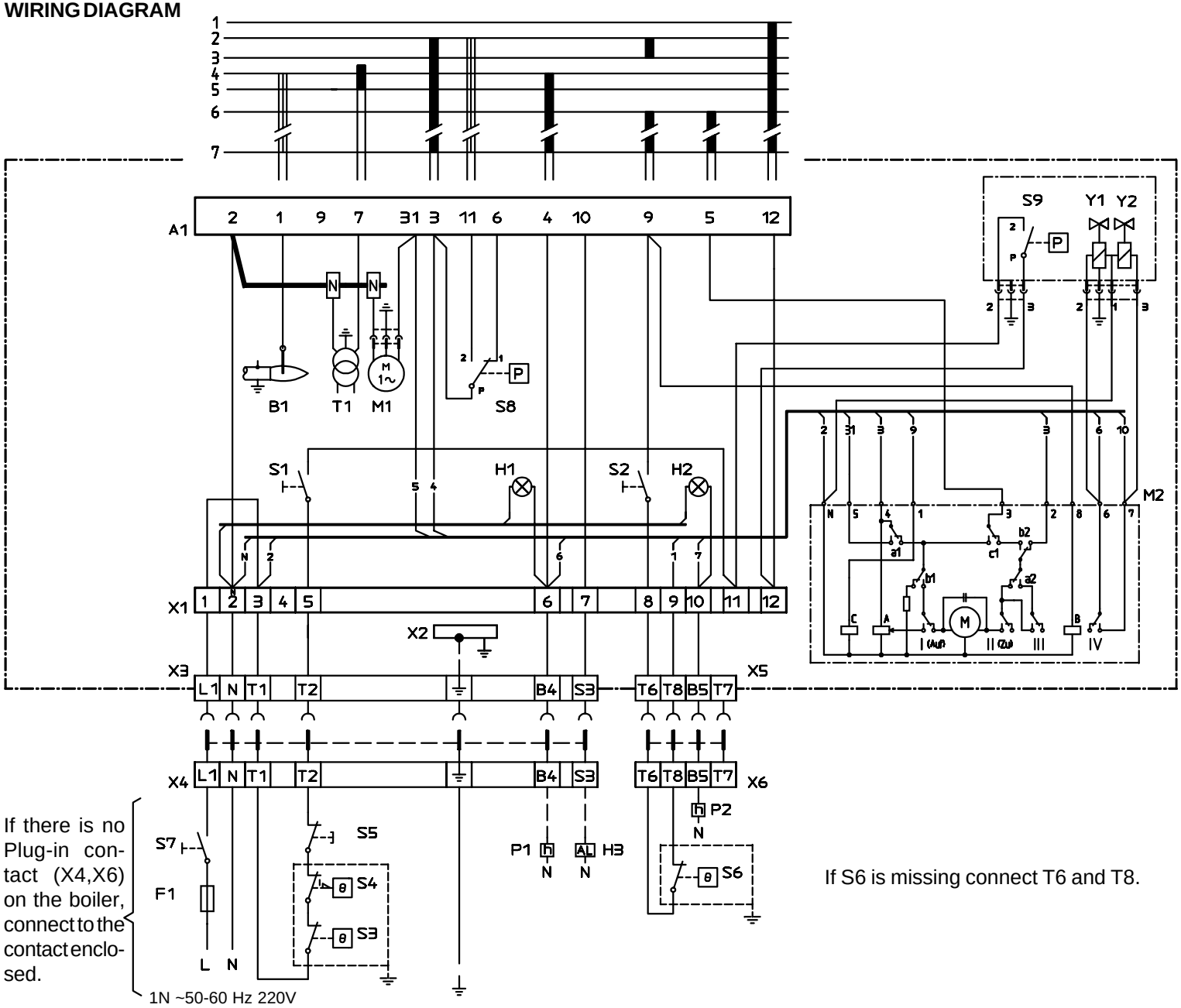

If there is no Plug-in contact (X4,X6) on the boiler, connect to the contact enclosed.

If S6 is missing connect T6 and T8.

COMPONENT LIST

A1	Gas burner control
B1	Ionization electrode
F1	Fuse
H1	Lamp, low capacity
H2	Lamp, high capacity
H3	Alarm signal 220 V
M1	Burner motor
M2	Damper motor, L&S SQN75.254.A21B
P1	Time meter, total operating time
P2	Time meter, high capacity time
S1	Operating switch
S2	Operating switch, high/low capacity
S3	Control thermostat
S4	Temperature limiter
S5	Micro switch for hinged door
S6	Control thermostat, high/low capacity
S7	Main switch
S8	Air pressure switch
T1	Ignition transformer
X1	Connection terminal board
X2	Earth terminal
X3	Plug-in contact, burner
X4	Plug-in contact, boiler
X5	Plug-in contact, high/low capacity, burner
X6	Plug-in contact, high/low capacity, boiler
S9	Gas pressure switch } MultiBloc
Y1	Gas solenoid valve 1 } MultiBloc
Y2	Gas solenoid valve 2 } MultiBloc

Mains connection in accordance with local regulations.

ELECTRIC EQUIPMENT

GAS BURNER CONTROL : LMG222…/LGB22…

FUNCTION

1. Operating switch On – Thermostat On – gas pressure switch ON – Air damper closed
   A control is made that the air pressure switch does not indicate fan pressure. Then the burner motor starts.

2. Air damper motor opens
   The air damper motor opens the damper to full load. A Control is made that the air pressure switch indicates sufficient fan pressure.

3. Air damper motor closes
   The air damper motor closes to low load. Then the ignition spark is formed.

4. Main and safety valves open
   The gas is ignited. The ionization electrode indicates a flame.

5. The safety time expires
   The ignition spark goes out. The safety time expires. If there is no flame or if for some reason the flame disappears after this time limit, the burner control locks out.

6. Operating position
   The burner is in operating position and can now change over to full load if the opersting switch and the thermostat for full load are in position On. the burner can alternate between full and low load depending on set temperature.

7. Stop
   The operation of the burner can now be interrupted by means of the operating switchor the thermostat.

- The control locks out
  The red lamp in the control s lit. Restart the burner by pressing the reset button.

BOOSTER WIRING DETAILS

BOOSTER WIRING: This applies to a Nu-way single booster wired to drawing numbers WA4-6278 or WA4-6770 only. For further details please refer to Nu-way.

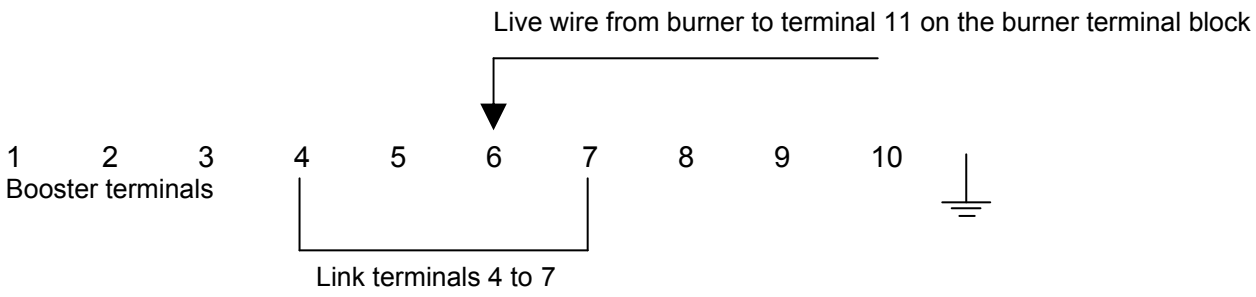

Please note: To facilitate the wiring connection to the control box, the this burner will require an auxiliary panel to be fitted to the burner body.

EXTERNAL WIRING CONNECTIONS FOR MGN SERIES BURNERS

3PH SUPPLY

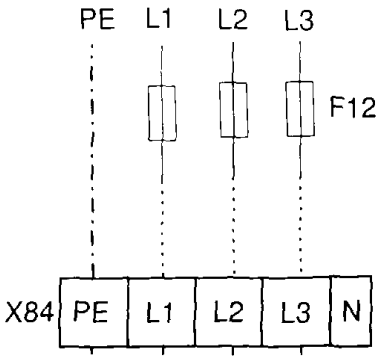

BLACK

MPA HIGH/LOW

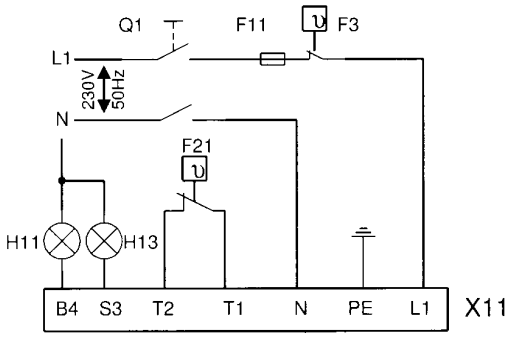

BROWN/BLACK

GAS TRAIN

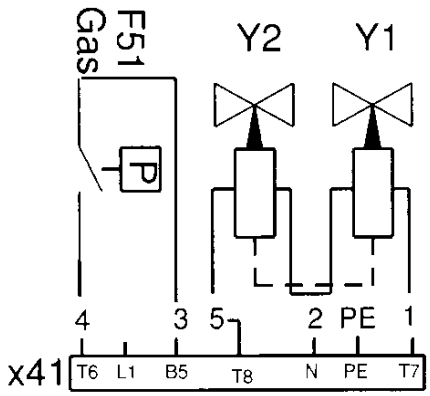

GREEN

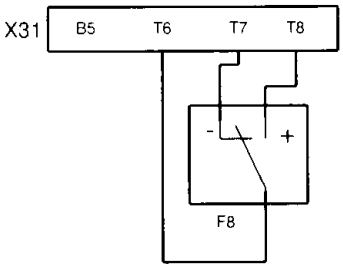

BROWN

MPA TLK MOD

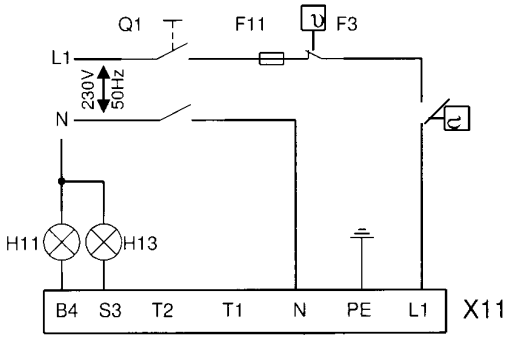

BROWN/BLACK

VALVE PROVING

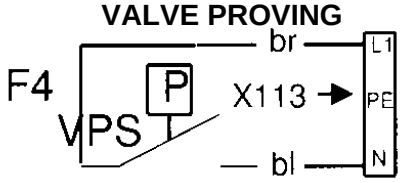

BLACK

MODULATING

Note:
Control Loop is via Alarm 1 in TLK Control

For Modulating remove plug-in loose connector on control pack

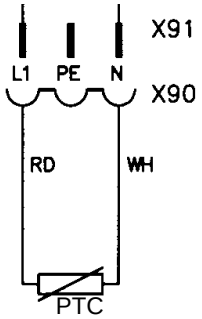

WATER TEMP. SENSOR
KTY 81 - 121

BLACK

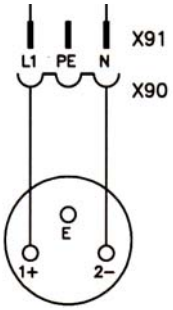

B8
PRESSURE TRANSMITTER
0-20 mA OUTPUT
MIDAS JP 401001

ELECTRIC EQUIPMENT

CONTROL DIAGNOSIS UNDER FAULT CONDITIONS AND LOCKOUT INDICATION

GAS BURNER CONTROL: LMG ...

Operating concept

• Burner control has initiated lockout ⟶ Red fault LED on 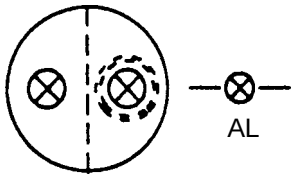	• Reset Press lockout reset button for 0.5 ...3 s • Diagnosis of cause of fault - Wait >10 s - Press lockout reset buttonj for >3 s - Read blink code of red fault LED ⟶«Error code table»
• Burner control in operation ⟶ Green flame signal LED on 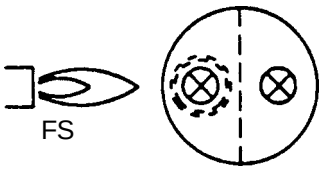	• Restart Press lockout reset button for 0.5 ...3 s • Read flame establishment time - Press lockout reset button for > 3 s - Read blink code of green flame signal LED ⟶«Error code table»

Diagnosis of cause of fault

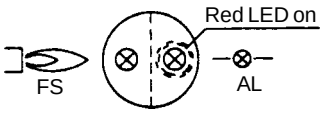

After lockout, the red fault LED is steady on. For reading the cause of fault, refer to the blink code given in the following table:

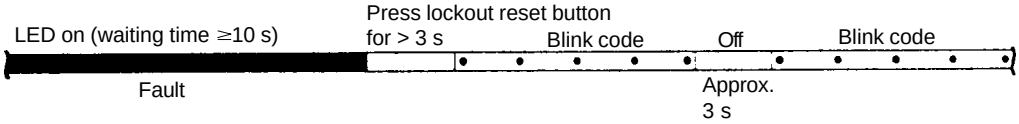

Error code table

Blink code	Possible cause
2 x ••	• No establishment of flame at the end of «TSA» - Faulty or soiled detector electrode - Faulty or soiled fuel valves - Poor adjustment of burner
3 x •••	• Air pressure monitor does not close - «LP» faulty - «LP» incorrectly adjusted - Fan motor does not run
4 x ••••	• Air pressure monitor does not open or extraneous light on burner startup - «LP» faulty - «LP» incorrectly adjusted
5 x •••••	• Extraneous light during pre-purging - Or internal device fault
7 x •••••••	• Loss of flame during operation - Poor adjustment of burner - Faulty or soiled fuel valves - Short-circuit between detector electrode and ground
8...17 x •••••••• …… •••••••••• •••••••	• Free
18 x •••••••••• ••••••••	• Air pressure monitor opens during pre-purging or operation - «LP» incorrectly adjusted - Four times loss of flame during operation (LMG25)
19 x •••••••••• •••••••••	• Faulty output contact - Wiring error - External power supply on output terminal
20 x •••••••••• ••••••••••	• Internal device fault

During the time the cause of the fault is diagnosed, the control outputs are deactivated.
- The burner remains shut down
- Exception: fault status signal «AL» at terminal 10

The burner is switched on only after a reset is made.
- Press lockout reset button for 0.5...3 seconds

Interrogation of flame establishment time

This function measures the flame establishment time with ionization supervision. With the AGQ2..., this function cannot be used.
In the running position, the green flame signal LED is steady on.
The flame establishment time is read in the running position according to the following sequence:

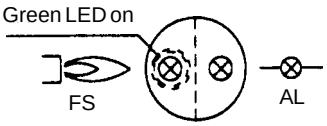

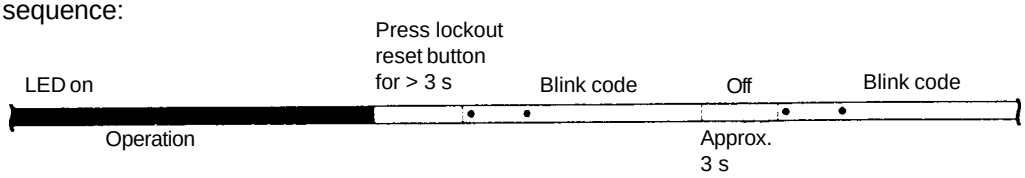

When reading the flame establishment time, the burner is put out of operation. Reading is in the form of a blink code as multiples of 0.4 s.

Diagnostics table

Blink code	Flame establishment time with «TSA» = 3 s	Flame establishment time with «TSA» = 5 s
1 x •	≤0.4 s	≤0.4 s
2 x ••	≤0.8 s	≤0.8 s
7 x •••••••	≤2.8 s	≤2.8 s
12 x •••••••••• ••	---	≤4.8 s

- The flame establishment time is the period of time from the moment «BV1» opens to the moment the flame signal is detected for the first time

- The flame establishment time remains stored for one startup sequence and is reascertained the next time the burner is started up

- During the period of time the flame establishment time is interrogated, the fault status outputs are deactivated:
  - Burner remains shut down
    It is restarted only after a reset is made
  - Press lockout reset button for 0.5...3 seconds

Note:
If ignition and ionization electrodes are not correctly located, ignition effects may lead to incorrect measurements.

MEASURES AND CHECKS BEFORE START-UP, 2-STAGE- OR MODULATING BURNERS

INNER ASSEMBLY

Ensure that the ignition and ionisation electrodes are correctly adjusted. The sketch shows the correct measurements.

GAS QUALITY

Ensure that the burner head is meant for the gas quality to be used (see fig.).

VENTING

The gas line is vented by loosening the screw on the test nipple for the inlet pressure. Connect a plastic hose and conduct the gas into the open. After having vented the gas line tighten the screw again.

LEAKAGE CONTROL

When making a leakage control of the gas supply system the solenoid valve should be closed. Connect a pressure gauge to the test nipple Pa, see fig. The test pressure in the system should be 1,5x max. inlet pressure or min. 150 mbar. If any leakage, locate the source by means of soapy water or a leak location spray. After tightening repeat the test.

ELECTRIC FUNCTION TEST:

Ensure that phase and neutral are not reversed. The gas shut-off cock should be closed.To prevent the gas pressure switch from locking out it should be linked temporarily.

After the main switch has been switched on and the thermostats have been adjusted the pre-purging period begins (30-35sec.). At the end of this period the pre-ignition period starts (0,5-2,5 sec. dependent on the design of the gas control). The gas valve is energized and opens and flame is established. At the end of the safety time (2-3 sec.) the gas control locks out. The solenoid valve and the motor will be "dead". Remove the link from the gas pressure switch after the test is finished.

Note on 2-stage and modulating burners that during the pre-purging period the damper opens to the set value for air on stage 2 and just before the end of the pre-purging period it goes down to the air setting for stage 1. On some burners under 350kW the pre-purging mainly takes place with the air damper set for stage 1.

NOTE! APPLIES ONLY TO GAS BURNER CONTROL LFL1.

When using LPG (Propane) the burner should be connected for post-purge. Move connection to terminal 6 to terminal 7 in the base of LFL1.

LEAKAGE CONTROL

MultiBloc

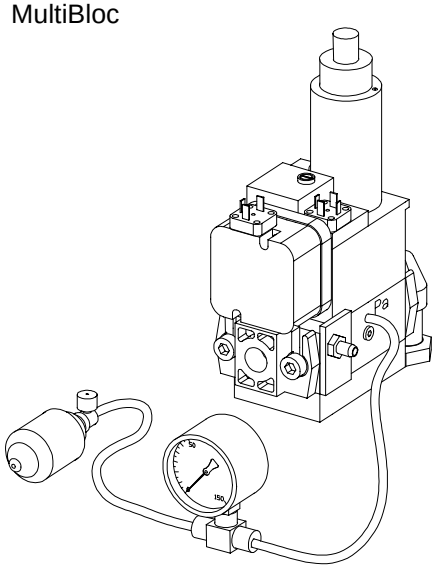

Gas train

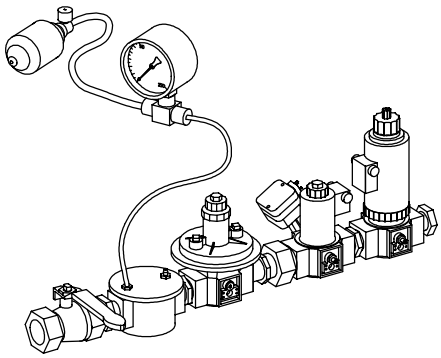

MEASURES AND CHECKS BEFORE START-UP

INNER ASSEMBLY
Town gas

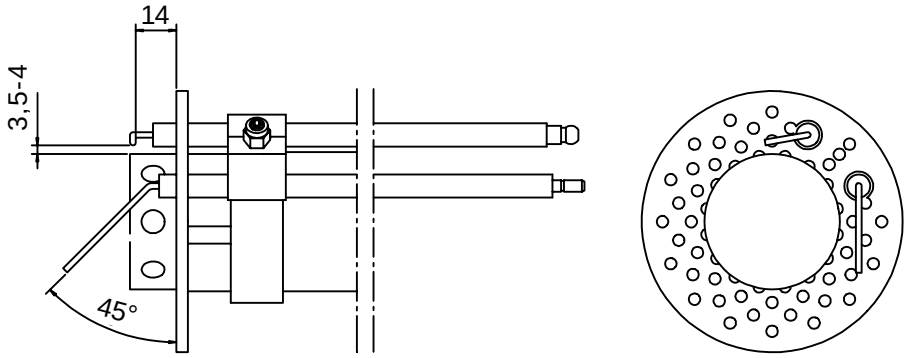

INNER ASSEMBLY
Natural gas, LPG

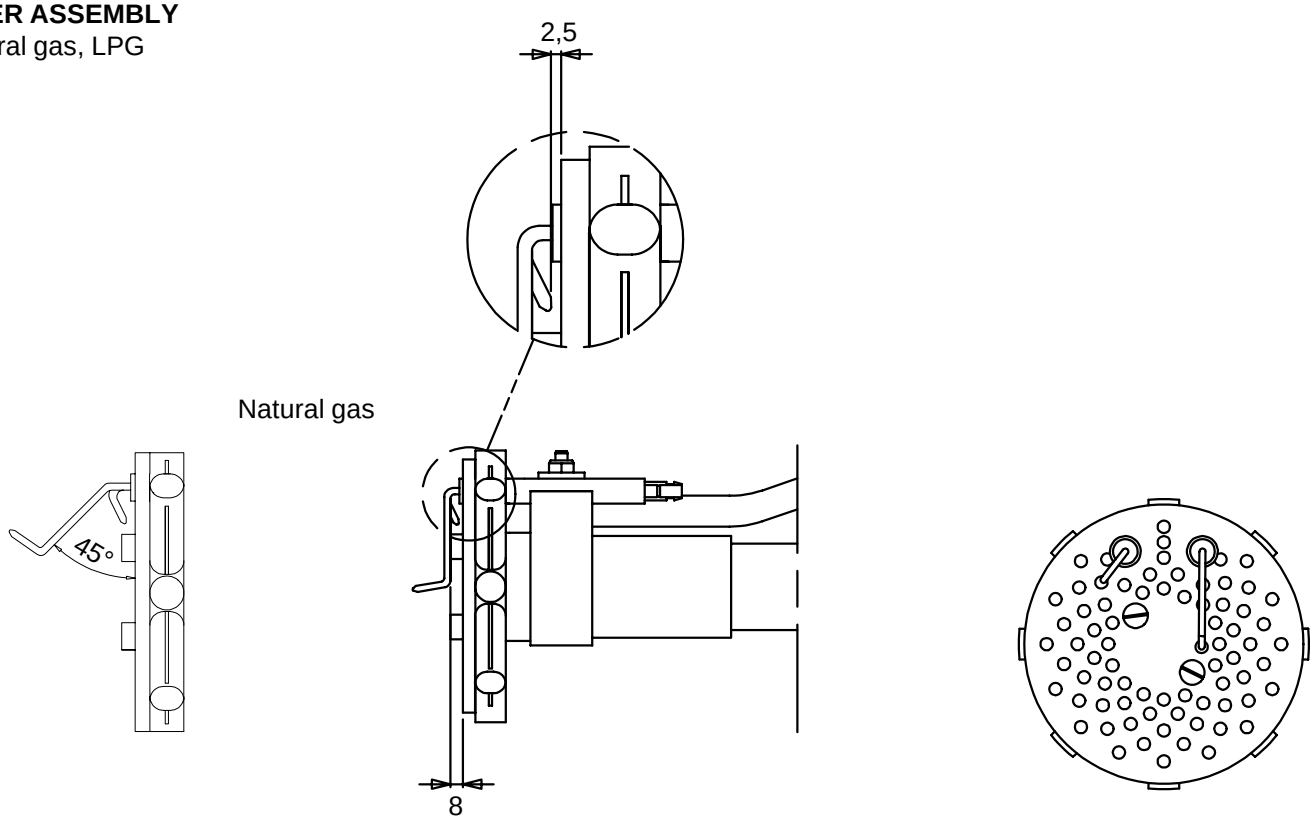

INNER ASSEMBLY
Biogas (UV-detector)

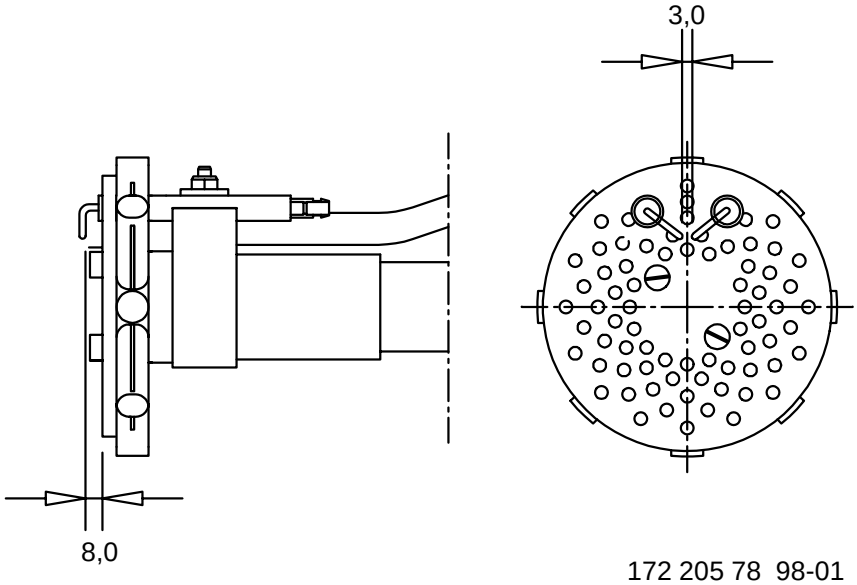

DETERMINATION OF GAS VOLUME FOR THE INSTALLATION

Specifications on natural gas, town gas and bio gas vary. For more exact information please contact the gas distributor.

Gas quality	Net calorific value kWh/Nm³	kJ/Nm³	kcal/Nm³
Natural gas	10.3	37 144	8 865
Propane	26.0	93 647	22 350
Butane	34.3	123 571	29 492
Town gas	4.9	17 653	4 213
Bio gas	7.0	25 219	6 019

EXAMPLE HOW TO CALCULATE THE GAS VOLUME (NATURAL GAS)

V = Gas volume Nm^3/h

Q = Boiler output 120 kW

H_u = Calorific value of the gas A. 37 144 kJ/Nm^3, B. 10.3 kWh/Nm^3

η = Expected efficiency 90%

Ex. A $V = \frac{Q \cdot 3\,600}{H_u \cdot \eta} = \frac{120 \cdot 3\,600}{37\,144 \cdot 0{,}90} \approx 12{,}9\ Nm^3/h$

Ex. B $V = \frac{120}{10{,}3 \cdot 0{,}90} \approx 12{,}9\ Nm^3/h$

If the barometer height, pressure and temperature of the gas deviate very much from the normal values this must be taken into account as follows:

$f = \frac{273 + t}{273} \cdot \frac{1013{,}25}{B + P_u}$

t = Temperature of the gas at the gas meter (15°C)

B = Barometer height (945 mbar)

P_u = Pressure of the gas at the gas meter (15,0 mbar)

$f = \frac{273 + 15}{273} \cdot \frac{1013{,}25}{945 + 15}$

$f \approx 1.11$

The gas volume read on the gas meter actually reads $1{,}11 \cdot 12{,}9 = 14{,}4\ m^3/h$.

FUNCTION, 2-STAGE DESIGN

AIR ADJUSTMENT

The damper motor turns the damper between three pre-set positions: fully closed, low load, full load. These positons are controlled in the motor by cams of different colours. The black cam controls the gas valve for full load.

If the air volume needs changing: Remove the cover of the damper motor and change the position of the cams by turning them with the tools accompanying the burner.

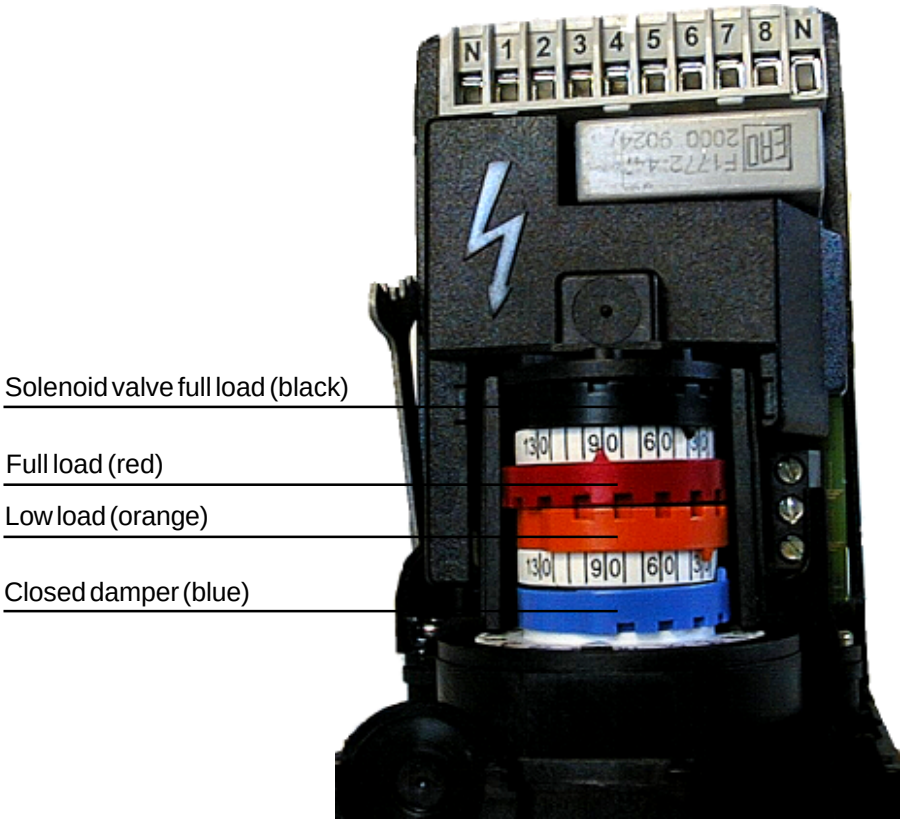

Low load:

Adjust the operating switch to full load (II).

* Reduce the air volume:
  Turn orange cam towards 0°
* Increase the air volume:
  Turn orange cam towards 90°

Adjust the operating switch back to low load and check the air volume.

Full load

Adjust the operating switch to low load (I).

* Reduce the air volume:
  Turn red cam towards 0°
* Inrease the air volume:
  Turn red cam towards 90°

If the red cam is moved, change the black cam as much.

Adjust the operating switch to low load and check that the correct air volume has been obtained.

Note! The blue cam is the limit position for fully closed damper and it is normally not necessary to change it.

MULTI-BLOC, MB-ZRDLE 405-420

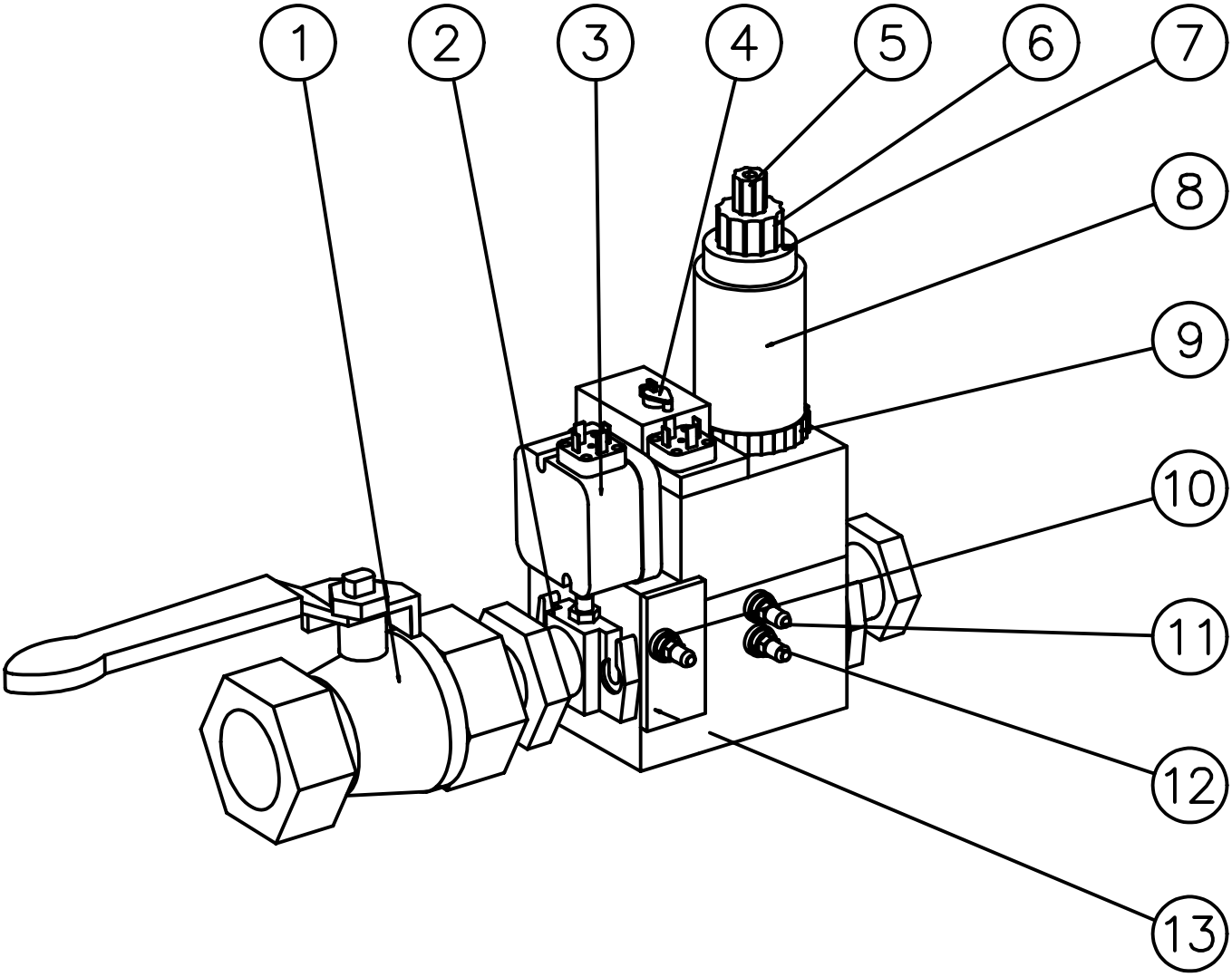

1. Ball valve
2. Fixing flange
3. Gas pressure switch
4. Governor with pressure adjustment
5. Protective cover, start gas adjustment
6. Hydraulic device, adjustment of stage 2
7. Lock screw for flow adjustment
8. Main valve
9. Knob for adjustment of stage 1
10. Test nipple, inlet pressure
11. Test nipple, pressure after governor
12. Test nipple, before governor
13. Filter

Max. inlet pressure: 360 mbar.
Adjustable governor pressure:
405 - 412 S50 = 4 - 50 mbar
415 - 420 S20 = 4 - 20 mbar
415 - 420 S50 = 20 - 50 mbar
Solenoid valve: Slow opening valves with adjustable start load, stage 1 and stage 2.

ADJUSTMENT OF MULTI-BLOC, MB-ZRDLE 405-420

FLOW ADJUSTMENT
2-STAGE DESIGN

For stage 1, loosen the lock screw a.
Turn the hydraulic device e:
to the right = the gas flow is reduced
to the left = the gas flow is increased

For stage 2, turn the hydraulic device b:
to the right = the gas flow is reduced to the left = the gas flow is increased
Do not forget to tighten the lock screw again.

ADJUSTMENT OF GOVERNOR

Adjust outlet pressure from governor by means of a screw driver. Min. and max. outlet pressures correspond to appr. 60 turns of the spring. It is not possible to change pressure springs in order to change the outlet pressure.

Turn to the right = the outlet pressure is increased
Turn to the left = the outlet pressure is reduced

ADJUSTMENT OF START GAS FLOW

Remove the protective cover c.
Turn the adjustment knob d (use the protective cover as a tool) to the desired start gas flow.

Turn to the right = the start gas flow is reduced
Turn to the left = the start gas flow is increased

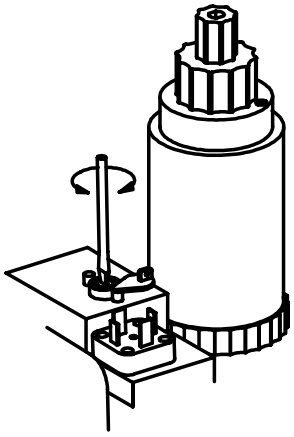

ADJUSTMENT OF GOVERNOR

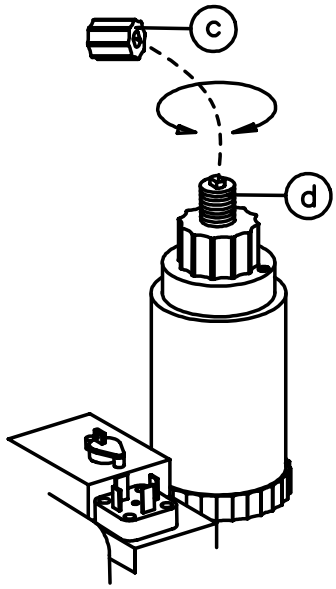

ADJUSTMENT OF START GAS FLOW

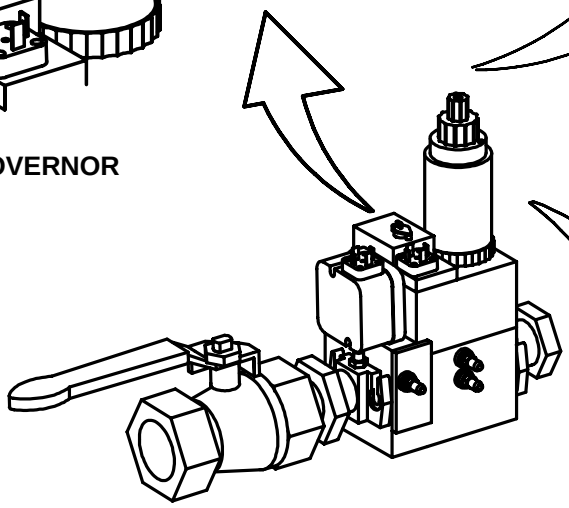

MULTI-BLOC
MB-ZRDLE 405-420

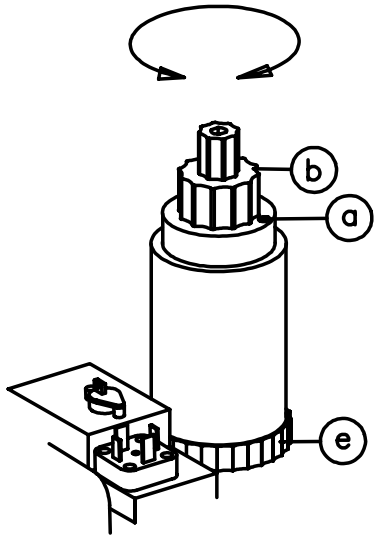

FLOW ADJUSTMENT

GENERAL INSTRUCTIONS

ADJUSTMENT OF BURNER

The burner is from the factory pre-set to an average value that must then be adjusted to the boiler in question.
All burner adjustments must be made in accordance with boiler manu-facturers instructions.These must include the checking of flue gas temperatures, average water temperature and CO_2 or O_2 concentration.

GENERAL INSTRUCTIONS

The installation of the gas burner must be carried out in accordance with current regulations and standards. The installers of gas burners should therefore be acquainted with all regulations and ensure that the installation complies with the requirements. The installation, mounting and adjustment should be made with the greatest care and only the correct gas should be used.

OPERATING INSTRUCTIONS

The operating instructions accompanying the burner should be left in a prominent position in the boiler room.

INSTRUCTIONS

The user should be thoroughly instructed in the function of the gas burner and the whole installation. The supplier must instruct the user.

INSPECTION AND MAINTENANCE

Daily inspection is advisable.

START UP

After the burner has been fitted to the boiler and the electric connection, the leakage control, the venting and the electric function test have been carried out, the burner will be ready for start-up.

Howerer, study the sections dealing with adjustments of multi-bloc, combustion air and combustion head.
Open the ball valve and switch on the main switch. If the burner starts the actual adjustment can be made.

ADJUSTMENT OF BURNER HEAD

The burner is equipped with an adjustment device changing the position of the brake plate in the burner head. This is used to adjust the correct pressure drop over the combustion device in order to obtain a good pulsation free combustion.

Which position to use depends on input and overpressure in the boiler.

A general rule is that the lower capacity the smaller the opening between brake plate and combustion device.

COMMISSIONING OF INSTALLATION

Control of the combustion. The combustion quality is checked by means of a flue gas analysis device. Adjust the burner to appr. 20% excess air in accordance with the table. Check the flue gas temperature. Calculate the efficiency. Check also the actual gas volume on the gas meter so that the correct input is achieved.

SERVICE

Service should only be carried out by qualified personnel. Replacement parts should be of the same make and approved by the same authorities as the original. If the burner is converted to fire another gas quality it must be re-commissioned. If town gas is to be fired the combustion head must be converted and the gas train adjusted to suit (e.g.a larger gas armature or a different spring in the governor may be required).

Gas quality	CO_2% lambda 1,2	0_2%	max. CO_2%
Natural gas	10,0	3,5	11,9
LPG	11,5	3,5	13,9

GENERAL INSTRUCTIONS

ADJUSTMENT OF BRAKE PLATE

- Loosen the screw on the adjustment device.
- To reduce the opening: turn the knob to the left.
- To increase the opening: turn the knob to the right.

The adjustment of the position of the brake plate affects the air flow. It is therefore always necessary to make a fine adjustment of the air by means of the air adjustment device of the burner.

CONTROL OF BURNER HEAD

To check the burner head, brake plate and electrodes proceed as follows: Loosen the nuts a. Swing out the burner. Remove the screw b and the knob for adjustment of burner head. Loosen the screw c so much so that the inner assembly can be pulled out.

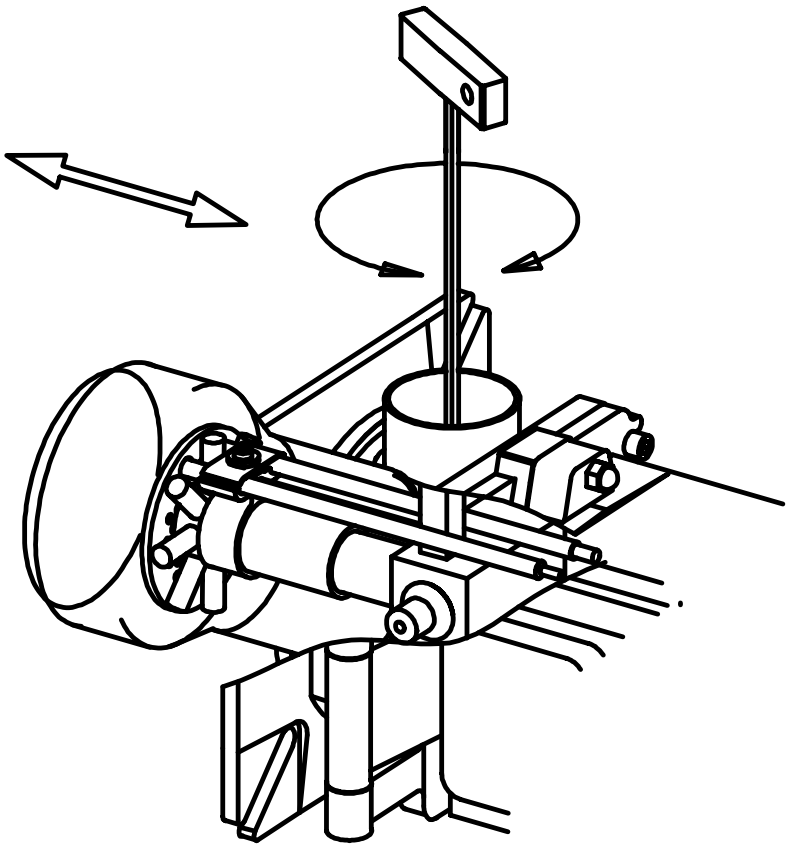

ADJUSTMENT OF INNER ASSEMBLY

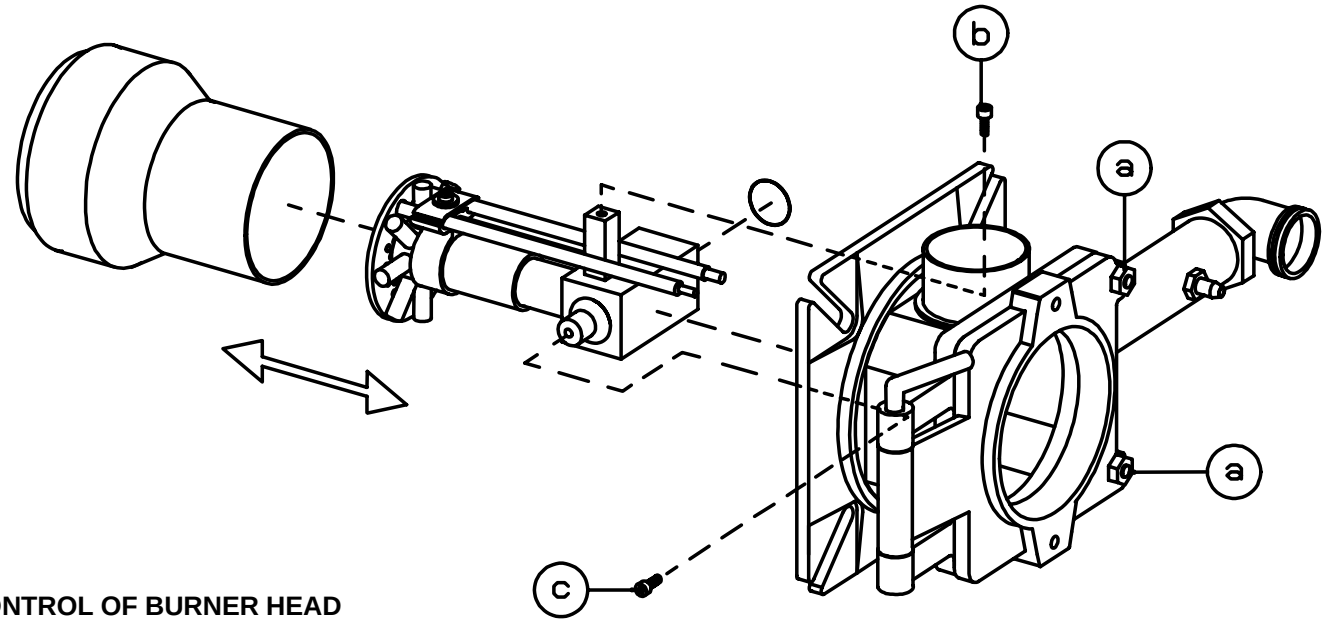

CONTROL OF BURNER HEAD

GENERAL INSTRUCTION

FLAME MONITORING AND MEASUREMENT OF IONISATION CURRENT
The burner is monitored according to the ionisation principle. Check the ionisation current on start-up and on each service call.

The reason for a low ionisation current may be leaking currents, bad connection to earth, dirt or a faulty position of the flame electrode in the burner head. Sometimes also a faulty gas/air mixture may cause too weak a ionisation current.

The ionisation current is measured by means of a microampere meter (µA) connected in series with the flame electrode and the gas burner control.

Connect the µA-meter, see figure. Min. required ionisation current according to table. In practice this current must be considerably higher, preferably more than 10 µA. All the gas burners are equipped with a ionisation cable that can be slit which facilitates the connection of the µA-device.

GAS PRESSURE SWITCHES:
Adjustment range:
2,5-50 mbar GW 50
5-150 mbar GW 150

ADJUSTMENT OF MIN. GAS PRESSURE SWITCH
The min. pressure switch should react if the gas pressure is too low and prevent the burner from starting. Too low a gas pressure during operation should stop the burner. The burner may start again when the rated gas pressure has been reached.
Remove the protective cover. Connect a pressure gauge for measuring the rated pressure. Decide on pressure at which the gas switch should switch off. Set this pressure by means of the valve. Carefully turn the knob (see figure) until the gas pressure switch switches off. The value shown on the scale should then approximately correspond with the value shown on the pressure gauge. Tolerance on scale appr. ± 15 %. Open the ball valve.

ADJUSTEMNT OF MAX. GAS PRESSURE SWITCH
The burner is equipped with a max. gas pressure switch only on request. It should stop the burner if the gas pressure exceeds the set value. The burner can then only be re-started manually (gas burner control or overpressure switch).
Remove the protective cover. Connect a pressure gauge for measuring the rated gas pressure. Decide on pressure at which the gas pressure switch should switch off. Turn the adjustment knob to this value. Tolerance on the scale ±15%.

ADJUSTMENT OF AIR PRESSURE SWITCH
The air presure switch should stop the burner if the air volume is reduced.
The air proving device shall be adjusted in such a way that if there is insufficient air supply at the highest or lowest burner operating stage, the device operates before the supervised pressure is less than 80% of the pressure at the controlled stage and the CO content of the combustion products exceeds 1% by volume.

AIR PRESSURE SWITCH:
Adjustment range ca:
1-10 mbar LGW 10
2,5-50 mbar LGW 50

Gas control	Connection to terminal in gas control	Min. ionisation current required
LMG	1	2 µ A
LGB	1	10 µ A
LFL	24	10 µ A
MMI 810	2	5 µ A
TMG 740-3	1	5 µ A

FLAME MONITORING

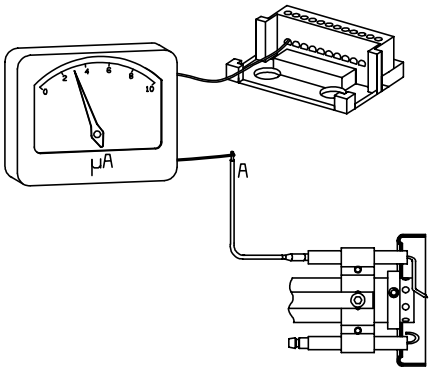

GAS PRESSURE SWITCH, AIR PRESSURE SWITCH

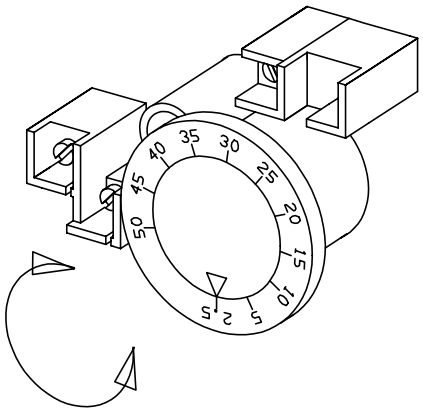

HANDING OVER OF THE INSTALLATION

- Make repeated start attempts to ensure that the adjustments function.

- Close the ball valve during operation to check that the gas switch switches off at the set value.

- Remove the hose for the air pressure switch to check that the burner locks out.

- Check that all protective covers and measurement nipples are mounted and fastened.

- Fill out necessary test reports.

- Instruct the persons in charge of the operation on the service and maintenance of the installation and what to do should any troubles occur.

- Inspection and service must only be carried out by authorized people.

FAULT LOCATION, FUNCTIONAL TROUBLES

Trouble free operation is dependent on three factors: electricity, gas and air supply. Should there be any changes in the ratio between these three factors there is a risk of break downs. It has been proved that most break downs are caused by simple faults. Before calling the service engineer, the following should therefore be checked:

- Is the gas cock open?

- Are all fuses in order and the current switched on?

- Are the thermostats correctly set?

- Are pressostats, overheating protection etc. in operating position and not locked-out?

- Is the gas pressure sufficient?

- Is the gas burner control in start position?

- Has the gas control or the motor protector locked out? - Reset.

- Is the circulation pump in operation?

- Is there a supply of fresh air to the installation?

If integral components are of a different make from what is stated in this manual, see the enclosed loose-leaf.

FAULT LOCATION GUIDE

Gas burner

The basis for trouble free operation can only be ensured by the correct combined effect of the three factors: electricity, gas flow and combustion air. Should any of these factors change troubles may arise.

It has been proved that many troubles have rather simple causes. Before calling the serviceman the following checks should be made:

1. Are the gas cocks of the installation open?
2. Are the fuses in order and the current switched on?
3. Are the controls (room thermostat, boiler thermostat etc.) correctly adjusted?
4. Is the gas pressure to the burner sufficient?
5. Is the gas relay of the burner ready for start and not locked out?
6. Is the air supply to the burner sufficient?

To facilitate fault location we have drawn up a scheme showing the most frequent faults in a gas burner installation and the remedies.

CAUSE	REMEDY
The burner does not start	
No gas	Check that all gas cocks are open.
No voltage	Check fuses, thermostats and electrical connections.
The burner motor fails to start	The thermal protection has locked out. Motor defective.
The gas relay is defective	Replace
Burner motor is running but no ignition after the pre-purge time has elapsed	
No voltage on the terminals	Check the contact. Replace faulty relay
The ignition electrodes in contact with each other or with earth	Adjust
The porcelain of the electrodes is broken	Replace the electrodes

CAUSE	REMEDY
The cable shoes have bad contact	Improve the contact
The ignition cables are damaged	Replace
The ignition transformer is damaged, no voltage on the secondary side	Replace the transformer
The ignition cable and the ionisation cable have been transposed.	Change
No flame establishment in spite of a trouble free start	
The gas solenoid valve defective	Replace
The gas solenoid valve does not open in spite of its obtaining voltage	Replace coil or the whole valve if necessary.
No voltage to the solenoid valve	Check the contact
No electrical connection through the air pressure switch	Test the adjustment and the function of the air pressure switch.
The starting load is not correctly adjusted	Reduce or increase the gas supply, reduce the quantity of air.
Gas relay defective	Replace
Air pressure switch incorrectly adjusted or defective	Check the adjustment and readjust.
No reponse as the cams of the servomotor are not correctly adjusted or out of position.	
The burner locks out after the safety time has elapsed in spite of flame establishment	
No ionisation current or the UV-cell in wrong position	Adjust the ionisation electrode and the UV-cell, examine cables and connections.
The supervision part of the gas relay is defective	Replace the relay

CAUSE	REMEDY
Voltage lower than 185 V	Contact the electricity authorities.
The ignition electrodes are disturbing the ionisation current	Adjust the ignition electrodes, repole the ignition transformer if necessary.
Bad earthing	Arrange for proper earthing.
Phase and neutral transposed	See wiring diagram and change.
The burner locks out during pre-purge	
Air pressure switch defective or incorrectly adjusted.	
The starting load is not correctly adjusted	Reduce or increase the gas supply. Reduce the quantity of air.
The gas pressure is too low	Increase the pressure. Contact the gas supply company if necessary.
Pulsations at start	
The ignition electrodes are wrongly adjusted	Readjust.
The gas pressure is too high	Check and adjust by means of a pressure gauge and a pressure adjustment valve.
The flue gas side is blocked	Check the chimney flue.
Pulsations during operation	
The burner is not correctly adjusted	Readjust
The burner is dirty	Clean the burner.
Defective chimney	Check and change the dimensions if necessary.
The burner is operating correctly but locking out now and then	
The ionisation current is too low	Check. Must be at least 4 µ A according to the relay manufacturer but should be 8-20 µ A.
The UV-cell is in a wrong position	Adjust.
Voltage drop at certain times	Must not drop more than 15% of the rated current. Contact the electricity authorities if necessary.
Air pressure switch defective or incorrectly adjusted	
Spark-over in ignition electrodes	Replace the electrodes

CAUSE	REMEDY
The ambient temperature of the gas relay is too high	Heat insulate, max. 60° C.
The ignition spark is too weak	Check the transformer
Bad combustion	
Bad draught conditions	Check the chimney
The flue gas temperature is too high	The boiler is overloaded. Reduce the quantity of gas.
The CO_2-content is too low	Check the boiler with regard to leaks. Choke the draught if it is too high.
The CO-content is too high	
Excess air when using natural gas and gasoil (propane, butane	Choke the air.
Air shortage	Open the air supply. Check the flue gas damper.
The holes in the gas nozzle are clogged	Clean.
The fresh air intake is too small	Check and enlarge.
The flame is not burning straight because the burner head is out of position	Check the burner head and readjust.
Condensation in boiler and chimney	
The flow gas temperature is too low or the quantity of gas is not sufficient	Increase the flue gas temperature by increasing the gas supply. Insulate the chimney.

NOTES

Enertech Limited, P O Box 1, Vines Lane
Droitwich, Worcestershire, WR9 8NA

tel: +44 (0) 1905 794331 • **fax:**+44 (0) 1905 794017
email: info@nu-way.co.uk • **web:** www.nu-way.co.uk

NU-WAY®
Enertech Group