MDFL 2800 / 3300 / 4000 Dual Fuel Burner

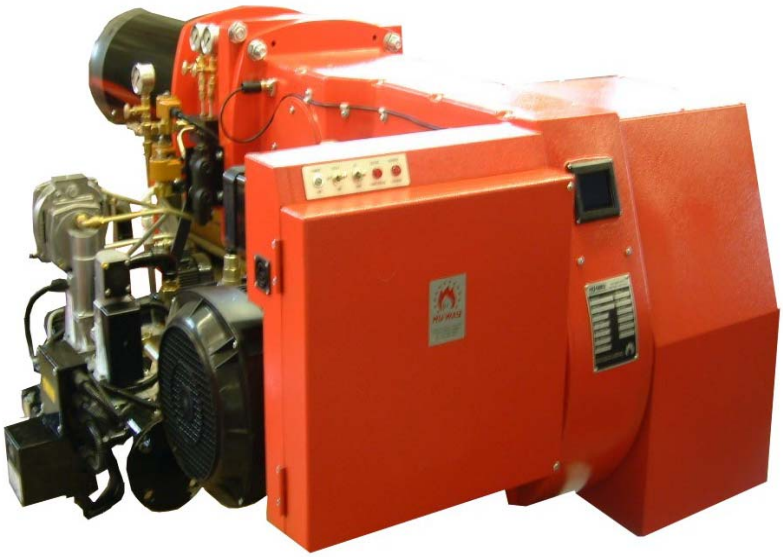

MDFL 2800/3300/4000 Dual Fuel Burner features:

- Designed and approved in accordance with the European Standard EN 267 and EN 676
- Two stage or modulating gas / two stage oil option, or modulating gas & oil iption
- Plug-in contact facilitates the installation
- Available for natural gas or LPG or town gas or biogas
- Light or heavy oil
- Hinged flange for ease of servicing
- All kW ratings are in nett CV

For more information on all Nu-way products please visit **www.nu-way.co.uk**

NU-WAY®
Enertech Group

Type		MDFL 2800-38	MDFL 2800-41	MDFL 3300	MDFL 4000
Capacity		774-2730	774-2730	1550-3367	1350-4095
Motor	V/Hz	400/50	400 / 50	400 / 50	400 / 50
	kW/A (Fuse)	38 - 7.5/3 x 32 HRC	41 - 7.5/3 x 32 HRC	36 - 7.5 / 3 x 40 HRC 41 - 11.0 /3 x 40 HRC 44 - 15.0 / 3 x 50 HRC	36 - 7.5 / 3 x 40 HRC 41 - 11.0 /3 x 40 HRC 44 - 15.0 /3 x 50 HRC
Start/Run Current	Amps	38 - 88.9 / 15.2	41 - 97.0 / 25.3	36 - 101.3 / 17.3 41 - 97.0 / 25.3 44 - 123.6 / 32.9	36 - 101.3 / 17.3 41 - 97.0 / 25.3 44 - 123.6 / 32.9
Control unit		Landis	Landis	Landis	Landis
Max inlet pressure	mbar	300	300	300	300
Flame monitoring		UV Cell	UV Cell	UV cell	UV cell
Air damper motor		Landis	Landis	Landis	Landis
Leakage control		•	•	•	•
Gross weight	kg	300	694	694	724
Volume	m^3	2.005	5.629	5.629	5.629

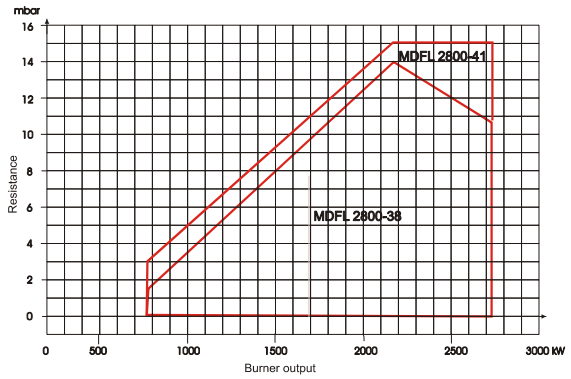

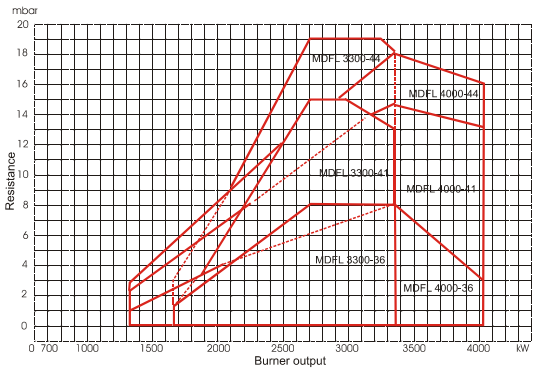

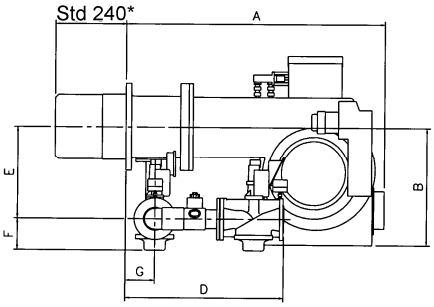

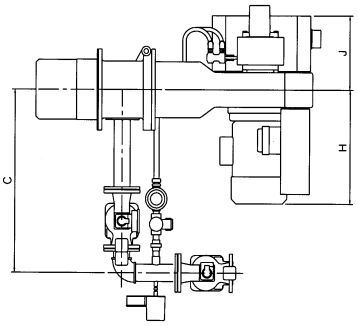

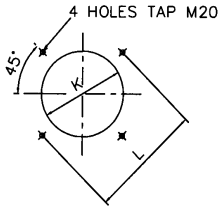

For MDFL 2800-41/3300/4000

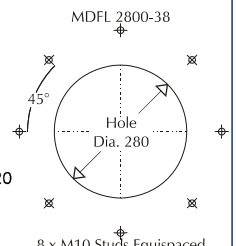

For MDFL 2800-38

*Extended lengths available

Burner	A	B	C	D	E	F	G	H	J	K	L
MDFL 2800-38	1081	475	920	735	415	165	141	500	350	280	305
MDFL 2800-41	1245	560	955	760	445	165	141	600	385	350	454
MDFL 3300	1245	560	955	760	445	165	141	600	385	350	454
MDFL 4000	1245	560	925	760	410	165	141	600	385	350	454

Enertech Limited, P O Box 1, Vines Lane
Droitwich, Worcestershire, WR9 8NA

tel: +44 (0) 1905 794331 • **fax:**+44 (0) 1905 794017
email: info@nu-way.co.uk • **web:** www.nu-way.co.uk

NU-WAY
Enertech Group

Issue 1 6/10