GB3160 / GB3500 / GB535 / GB540 GAS BOOSTER

GB 3160/3500/535/540 Gas Booster features:

- Provides pressure lift where nominal supply pressure is lower than required.
- Designed to BS8487

Gas Boosters are available for:-

- Single booster/burner operation
- Single booster/multi-burner operation (max 4 burners)
- Automatic twin duty standby operation (max 4 burners)
- Suitable for natural and manufactured gas
- Complete with anti-vibration kit

For more information on all Nu-way products please visit **www.nu-way.co.uk**

NU-WAY
Enertech Group

Type		GB3160	GB3500	GB535	GB540/1-3
Motor Rating	**kW**	**0.75**	**1.5**	**2.2**	**4**
Motor – 1 ph	V/Hz	230/50	-	-	-
Start Current		40.0	n/a	n/a	n/a
Run Current		5.0	n/a	n/a	n/a
Motor – 3 ph	V/Hz	400/50	400/50	400/50	400/50
Start Current		11.0	18.0	25.0	45.0
Run Current		2.0	3.2	4.0	8.5
Noise @ 1m	dBA	69	76	82	84
Weight	kg	34	37	40	71

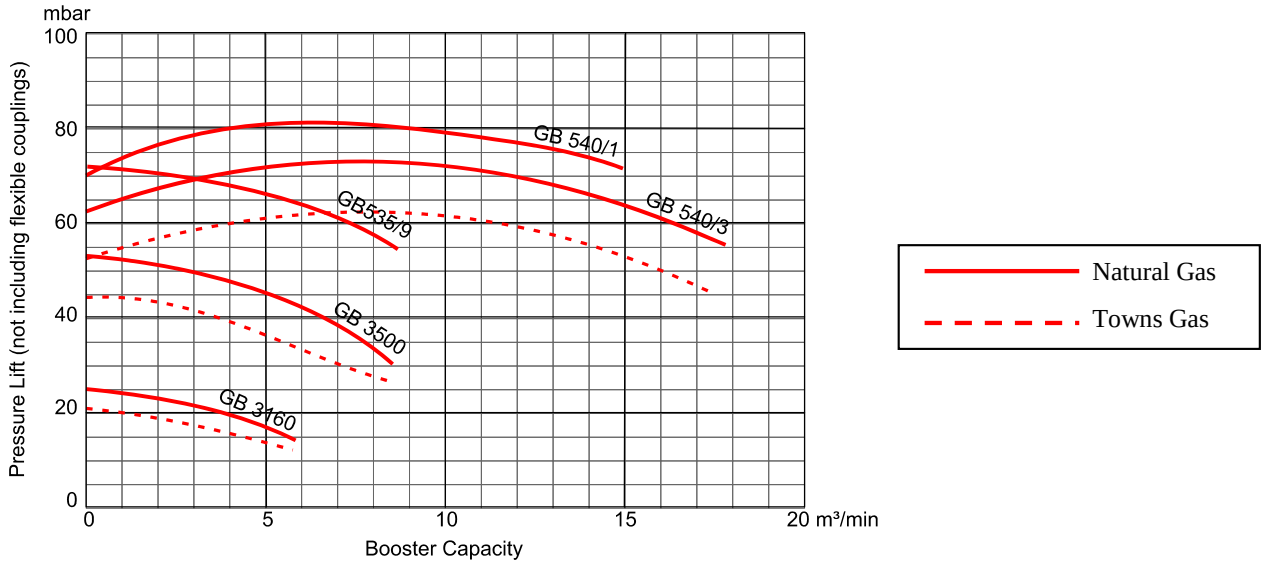

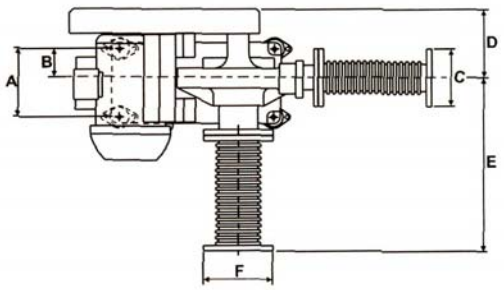

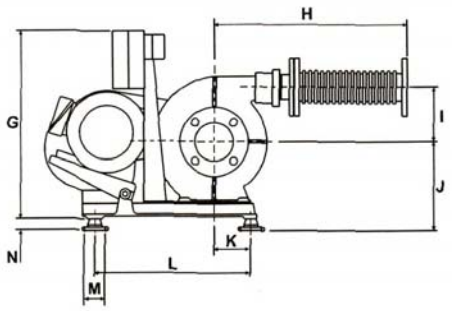

Burner	A	B	C	D	E	F	G	H	I	J	K	L	M	N
GB3160	90	45	2” Table E	175	352	3” Table E	665	455	130	265	115	430	73	37
GB3500	90	45	2” Table E	175	352	3” Table E	665	455	130	265	115	430	73	37
GB535	143	80	DN50	168	401	DN80	700	480	127	215	80	378	73	37
GB540	184	80	DN 80	206	515	DN100	700	537	127	239	80	419	73	37

Enertech Limited, P O Box 1, Vines Lane
Droitwich, Worcestershire, WR9 8NA

tel: +44 (0) 1905 794331 • **fax:**+44 (0) 1905 794017
email: info@nu-way.co.uk • **web:** www.nu-way.co.uk

NU-WAY
Enertech Group

Issue 2 12/10