ENERTECH

NU-WAY®

Multiplex MPHA Series

20 kW- 4.4 MW

Hot Air Gas Burner

- Preheated air up to 700°C
- Exceptional flame stability
- Wide turndown up to 30:1
- On ratio, excess air or excess gas operation
- Low air and gas pressures
- Inner assembly easily removed
- Range of eight burner sizes giving maximum nominal outputs of 60 kW to 4.4 MW

OPERATION

The MULTIPLEX hot air burner has been designed to achieve a high degree of stability over a wide turndown range from relatively low service inlet pressures.

The complete operating range of the standard burners at required pressure is given in the information included in this data sheet.

Gas and air flows are normally controlled by double diaphragm proportionators measuring mass flow of air and gas to compensate for air temperature variations.

FUEL

Burners can be supplied for all commercial gases, (light) oil, or dual fuel.

REFRACTORY COMBUSTION TUNNEL

These burners are usually supplied with high temperature refractory quarls suitable for temperatures up to 1700°C.

BURNER OUTPUT

MPHA	2	4	6	10	15	25	40	60	100	150
Output (kW)	60	120	175	295	440	730	1170	1750	2950	4400

Note: Burner ratings based on Gross CV

MPHA LEADING DIMENSIONS

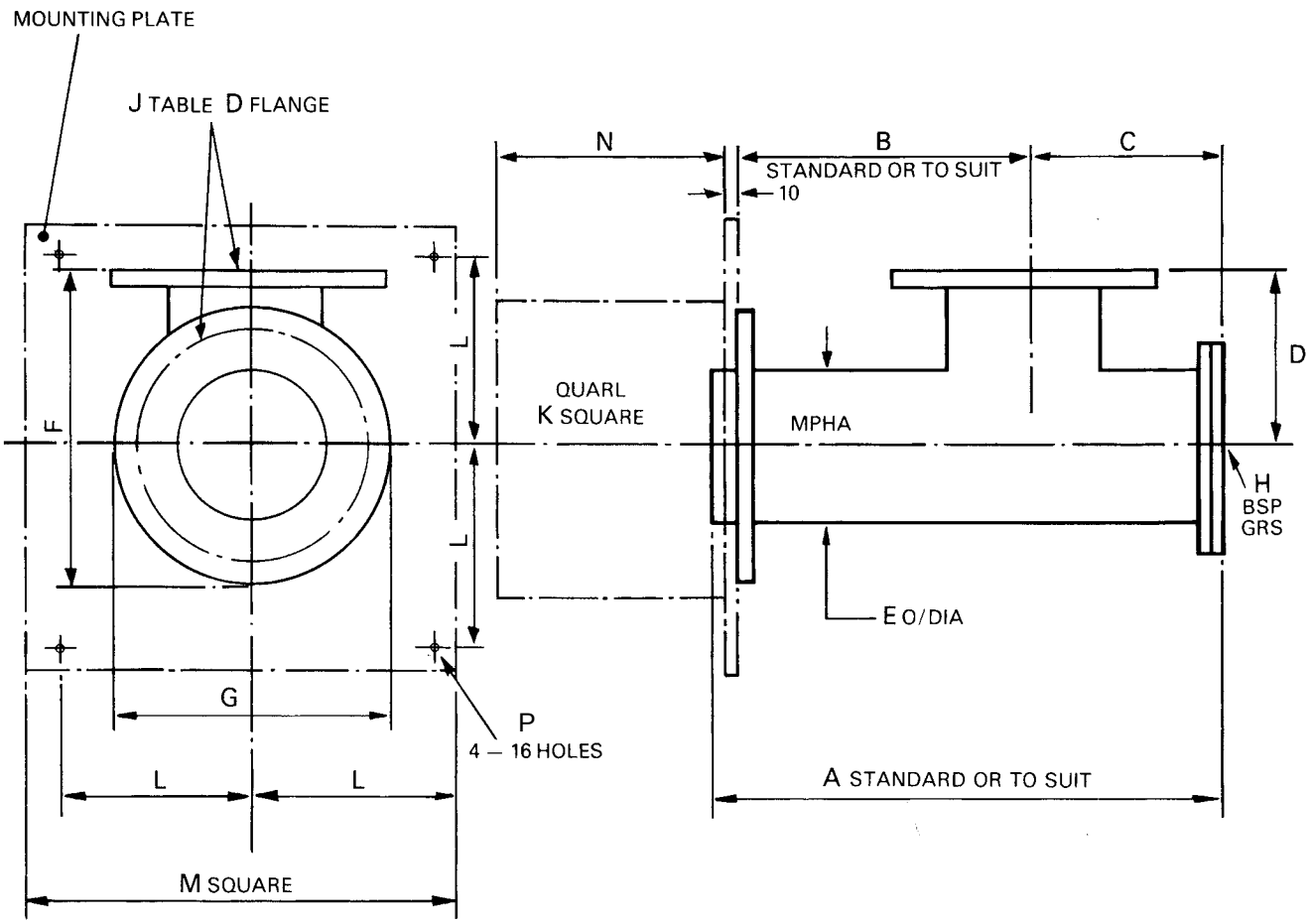

Burner Size	PRINCIPLE DIMENSIONS (mm)									FLANGES: BSP TABLE D				
	A	B	C	D	E	F	G	H (BSP) (inch)	J (inch)	K	L	M	N	P dia.
MPHA 2	340	165	125	116	76.2	163	165	$^{3}/_{8}$	2½	228	170	400	190	16
MPHA 4	398	200	148	125	102	227	203	¾	3½	228	170	400	190	16
MPHA 6	446	240	156	135	114.3	243	216	1	4	228	170	400	190	16
MPHA 10	525	305	185	165	141.3	290	250	1	5	228	170	400	190	16
MPHA 15	610	345	230	210	168	350	279	1½	6	343	245	550	230	16
MPHA 25	737	405	250	230	219	398	336	2	8	343	245	550	230	16
MPHA 40	916	540	281	260	275	458	395	3	10	450	260	600	415	18
MPHA 60	964	540	301	283	324	509	457	3	12	500	325	750	350	18
MPHA 100	Refer to Nu-way													
MPHA 150	Refer to Nu-way													

All dimensions are given for guidance and should be confirmed with Nu-way before proceeding with detailed drawings.

MPHADS0603

Nu-way Limited, P O Box 1, Vines Lane, Droitwich, Worcs. WR9 8NA
Tel: 01905 794331, Fax: 01905 794017
Email: info@nu-way.co.uk, Website: www.nu-way.co.uk