certified Qualitysystem
SQS
ISO 9001 / EN 29001
Reg. Nr. 10529

satronic
A Honeywell Company

DMG 970

Gas Burner Safety Control

For 2-stage forced draught and combi oil/gas burners

Possible flame detectors:
- **Ionisation probe**
- **Infrared flicker detector 1020**
- **UV flame sensor UVD 971**

INTRODUCTION

The burner control box DMG 970 controls and supervises power burner for gas and dual fuel. The control box is approved and certified according the relevant European standards. The use on direct air heaters according DIN 4794 is also possible.
The microprocessor- based programming sequence ensures extremely stable timings independent of voltage variations, ambient temperature and/or switch-on cycles. The built-in information system not only provides a continuous monitoring of the actual state of the box (very helpful especially for monitoring the start-up phase) but also informs about the cause of a possible lock out. The lock out cause is stored in such a way that it can be retrieved even after a power failure.
The control box is designed for maximum safety in case of fluctuations in the voltage supply. If the mains voltage drops below the permitted level, operation is interrupted and the control box automatically prevents the start sequence from being repeated. In this way, the safety of the system is not put at risk by a drop in the mains voltage. This low-voltage protection works not only during start-up but also permanently during operation.

CONSTRUCTIONAL FEATURES

Microprocessor, electronic components, output relais and flame amplifier are placed on two printed circuit boards. These plus the lockout- and reset circuit are well protected inside a flame resistant, plug-in type plastic housing.
The reset switch for reset / remote lockout with its built-in LED for displaying the information system plus the central fixing screw are placed on top of the housing.
The wiring base S98 is equipped with spare- and extraterminals and allows together with a variety of cable entry points utmost flexibility of electrical wiring.

The DMG 970 is funstionally compatible to MMI 810 and MMI 810.1

Please note: Is the DMG 970 to be used to replace the MMI 810 or 810.1, care has to be taken to make sure the air proving switch (LW) is wired between terminals 4 and 7 and not like on the MMI between 5 and 7.

TECHNICAL DATA

Operating voltage	220 / 240 V (-15... +10%) 50 Hz (±5%)
Fuse rating	10 A fast, 6 A slow
Power consumption	ca. 15 VA
Max. load per output	
- term. 3 ignition trafo	1.5 A, cos φ 0.2
- term. 4 motor	2.0 A, cos φ 0.4
- term. 5 + 6 solenoid valves	1.0 A, cos φ 0.4
- term. B alarm indicator	1.0 A, cos φ 0.4
total load	5.0 A, cos φ 0.4 max. 10 A during 0.5 sec
Air proving switch	1 working contact 4 A, 230V
Stray light monitoring	5 sec
Sensitivity (operation)	1 µA
Min. required ion. current	1.5 µA
Sensitivity for stray light	0.4µA
Ionisation probe insulation	Probe - earth greater than 50 MΩ
stray capacity	Probe - earth less than 1000 pF
cable lenght	< 3 m
Flame detectors	
IRD 1020	side-on or end-on viewing
UVD 971	end-on viewing
Weight incl. Wiring base	190 g
Mounting position	any
Protection class	IP 40
Approved ambient parameter for control and flame detector	max. 95% at 30° C
- for operation	-20° C... +60° C
- for storage	-20° C... +80° C
Build-up of ice, penetration of water and condensing water are inadmissible	
Approvals according to European standards	EN 298 and EN 230, as well as all other relevant Directives and standards
Classified acc. to EN 298	FTLLXN

Timings (sec.)

Model	waiting time start	max. reaction time for air proving switch **tlw**	supervised pre-purge time **tv1**	pre-ignition time **tvz**	ignition time total **tz**	Stray light monitoring **tf**	safety time **ts**	delay 2nd-stage **tv2**
01	0	60	24	3	5.5	5	3	12.5
02	0	60	24	3	7.5	5	5	14.5
03	0	60	40	3	5.5	5	3	12.5

0737.10-00-e/01/99

APPLICATION FEATURES

1. Information system

The information system is microprocessor based and reports on all aspects of burner control box operation and flame supervision. It informs continuously about the actual programming sequence the unit is just performing. Besides monitoring of the programming sequence it also allows to identify errors during start-up of operation without any additional testing devices. The automatically performed diagnosis is a valuable tool which facilitates service/maintenance work and therefore saves costs. The analyses of the error cause can be done directly on stage or if not possible afterwards as the lock out reason is stored in a non-volatile lock out mode memory.
The information system communicates with the outside world using a LED (the used Flash-Code is similar to the Morse-Code). The messages are optically transmitted by a appropriately flashing LED. Using an additional terminal (optional), the messages can be recorded and displayed in easy readable form.

1.1 Programming sequence display

The built-in microprocessor controls not only the programming sequence but the information system too. The individual phases of the programming sequence are displayed as Flash-Code.
The following messages can be distinguished:

Message	Flash-Code
waiting for air proving switch	I I .
pre-purge tv1	I I I .
pre-ignition tvz	I I I I .
safety time ts	▮ I .
delay 2nd stage tv2	▮ I I .
running	I _
low mains voltage	I ▮ ▮ _

Description
I = short pulse
▮ = long pulse
. = short pause
_ = long pause

1.2 Lock-out diagnoses

In case of a failure the LED is permanently illuminated. Every 10 seconds the illumination is interrupted by a flash code, which indicates the cause of the error. Therefore the following sequence is performed which is repeated as long as the unit is not reset.

Sequence:

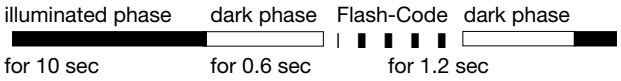

Error diagnosis

Error message	Flash-Code	Possible fault
lock out safety time	I ▮ ▮ ▮ ▮	within lock out safety time no flame establishment
stray light	I I ▮ ▮ ▮	stray light during monitored phase, detector may be faulty
air proving switch in closed position	▮ ▮ I I I	air proving switch contact welded
air proving switch time-out	I I I ▮ ▮	air proving switch does not close within specified time
air proving switch opened	I I I I ▮	air proving switch opens during start or operation
loss of flame	▮ ▮ ▮ ▮ I	loss of flame during operation

Flash-Code for manual lock out	
anual/external lock out (see also 3. lock out and reset)	I I ▮ ▮ ▮ _ ▮ ▮ ▮ ▮ ▮

2. Flame detection

The following types of flame detectors are suitable:
- Ionisation probe, temperature resistant material, well insulated (material and insulation same as for ignition electrode).
- Infrared-flicker detector type IRD 1020 with mounting flange M 93 or the UV solid state flame sensor UVD 971.

Flame detection using an ionisation probe is only possible in conjunction with mains supplies which provides a neutral earth connection.
Connecting the IRD 1020 or UVD 971 the correct wiring has to be observed.

2.1 Stray light monitoring

The stray light check is performed at the end of the pre-purge time for thr duration as mentioned in the technical datas.

3. Lock out and reset

The unit can be reset or brought into lock out mode in two different ways:

Internal
In the lock out case the unit can be reset by pushing the built-in button meaning a new start-up cycle is performed.

External
Instead of using the built-in lock out button the same function can be achieved by using an external button which connects terminal 9 with A (see also circuit and block diagram).

If the pushputton (internal or external) is pressed during normal operation or during the start sequence for more then 3 sec. and afterwards released, the control box will perform a shutdown.

Please note
The unit can only be brought to lockout mode or be reseted if power is applied to the unit.

4. Low-voltage protection

The mains voltage has to be more than 187 V_{eff} in order to allow the unit to perform a start-up.
The mains voltage is not only monitored in the start-up phase but also permanently during operation. If the voltage drops below < 160 V_{eff} during start-up or run time the control box goes into lock out mode. If the voltage rises again, the control box performs automatically a start-up as soon as the mains voltage is > 187 V_{eff}.

5. Safety

The design and control sequence of the DMG 970 controls will comply with the currently applicable standards and regulations (see also TECHNICAL DATA).

6. Mounting and electrical wiring

Wiring base:
- 3 earth terminals with additional terminal for burner earthing
- 3 neutral terminals with internal permanent connection to neutral terminal 8
- 2 independant spare terminals (S1 and S2)
- extra terminals A, B and C are standard
- 2 slide-in plates and 2 easy knock out holes (PG11 thread) plus 2 knock out holes in the base bottom faciliate the base wiring

The digital controls are ideally wiried on the new wiring bases S98, which are equipped with (terminals B and C are only for some special types of DMO or DMG) terminal A,. which is used for the remote reset / remote lockout functions.

Please note
To assist trouble-free operation the main neutral connection terminal in the wiring base must be fully tightened. The terminal screws are already in the undone position. To connect a wire to the terminal, the screw only needs to be fastened.

General: The control box and detector probes should not be subjected to excessive vibration.

INSTALLATION INSTRUCTIONS AND MAINTENANCE

1. Important notes

- The controls must be installed by qualified personnel only. The relevant national regulations have to be observed.
- On commissioning the wiring has to be carefully checked according the appropriate diagram, Incorrect wiring can damage the unit and endanger the installation.
- The fuse rating has to ensure that the limits specified in TECHNICAL DATA will not be exceeded. If these precautions are not observed, the effect of a short circuit can cause severe damage to the control and installation.
- For safety reasons a minimum of one control shutdown per 24 hours has to be observed.
- Disconnect the mains before the control box is plugged in or out.
- The control box is a safety device and must not be opened!

2. Function control

For safety reasons the flame detection system should be tested on commissioning the installation as well as after a service or longer shut-down.

a) Start-up with closed gas valve
   - After lock out safety time is over the unit has to go into lock out mode!

b) Normal start-up, when burner is running, close gas valve
   - After loss of flame, the control box has to go into lockout mode

c) Normal start-up, during pre-purge or operation, interrupt the air proving switch
   - The control box has to perform a lockout immediatly

d) Bridged air proving switch before start
   - the fan motor switches on for approx. 2 - 3 secs, followed by a lockout. After 10 secs., this quick lockout is resetted by the control box and a second start attempt follows (fan motor switches on for approx. 2 - 3 secs.). A standard lockout appears if the air proving switch (LW) contact is still in it's closed position (e.g. welded contacts). Has the air proving switch (LW) changed to it's open position in the meantime (e.g. by a run down motor), a normal start sequence follows.

3. Fault finding

The built-in information system facilitates the trouble shooting in the case of problems occurring during start-up or during operation.
A list of possible lock out messages can be found in APPLICATION FEATURES chapter 1.2.

Please note:
The control box is locked in lock out mode and the reasen for the lock out is displayed until the control box is reset, either by an internal or external reset (see also subject "3. Lock out and reset").

Removing the control box from its wiring base or by interrupting the supply line may not reset a lock out. Therefore, by applying power, the fan motor switches on for 2-3 secs. before the control box goes to lock out again and the cause of the last lock out.

Error	Possible fault
Burner not working	- Thermostat circuit open - Faulty electrical wiring - mains voltage < 187 V
Fan motor/nozzle preheater starts for a short period of time, control box goes to lock out	- Control box has not been reset - Air proving switch not in open position
Control box locks out pre-purge	- Air proving switch has not during closed within 60 secs. - Air proving switch has re-opened
Control box locks out at the end of pre-purge	- Air proving switch open - Flame signal
Burner starts, flame not established, lock out	- Stray light on flame detector (IRD only) - No ignition or no fuel
Burner starts, flame established, after safety time, lock out	- No or too low flame signal (flame does not stick, bad insulation of the ionisation probe, bad connection to frame ground) - Insufficient light on IRD - Sensitivity adjustment too low on IRD

CIRCUIT AND TIMING DIAGRAM DMG 970

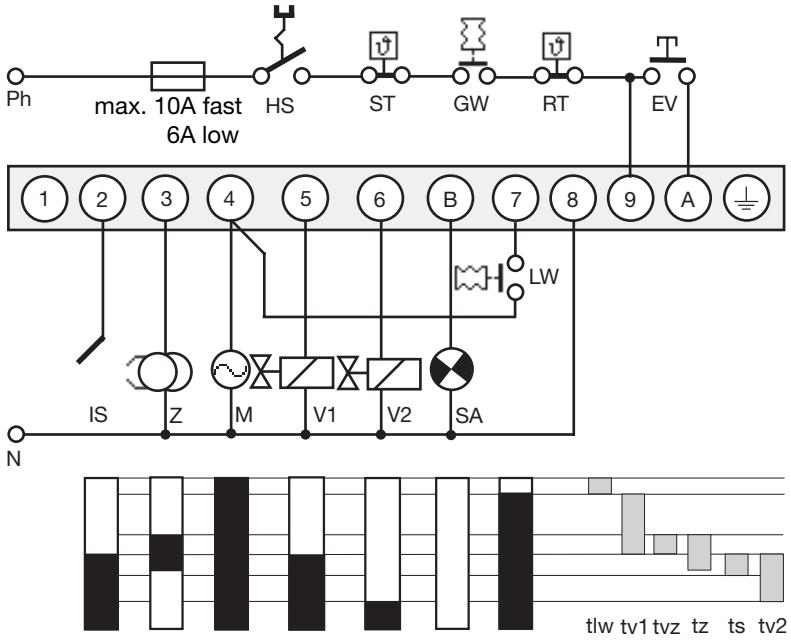

HS	Mains switch
GW	Gas proving switch
ST	Limit thermostat
RT	Control thermostat
EV	External reset and lock out button
IS	Ionisation probe (IRD 1010, UVD 971 see separate diagram)
Z	Ignition
M	Burner motor
V1	Solenoid valve, 1st-stage
V2	Solenoid valve, 2nd-stage
LW	Air proving switch
SA	External lock out signal
tlw	max. reaction time for air proving switch
tv1	Supervised pre-purge time
tvz	Pre-ignition time
tz	Ignition time total
ts	Safety time
tv2	Delay 2nd-stage

IRD- OR UVD CONNECTION

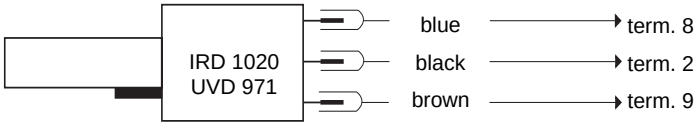

BLOCK DIAGRAM DMG 970

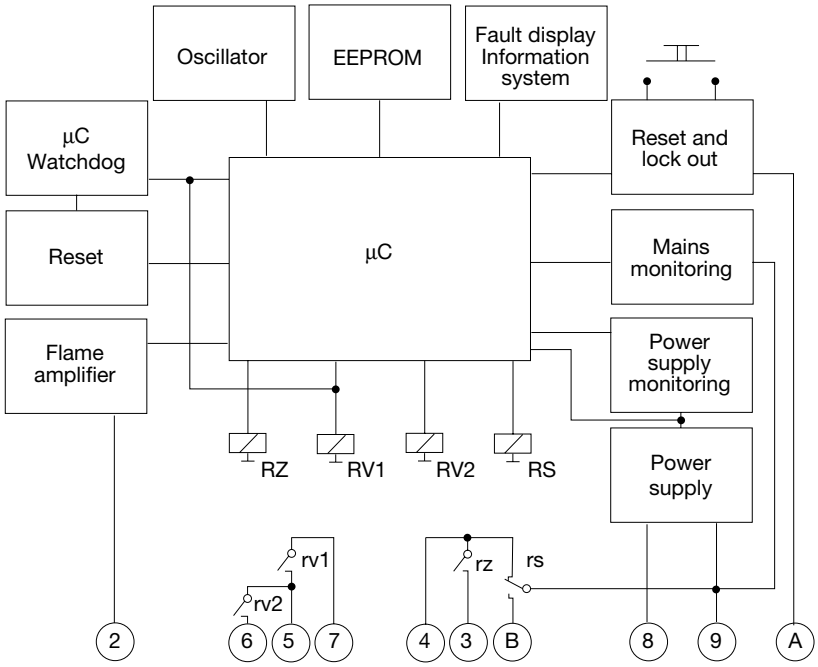

DMG 970 AND SOCKET

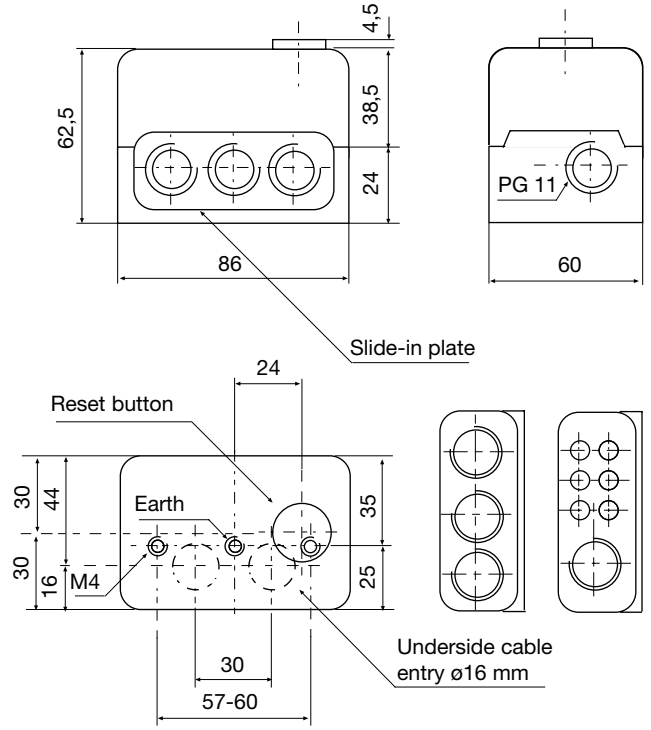

UVD 971

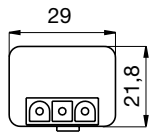

IRD 1020

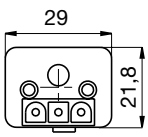

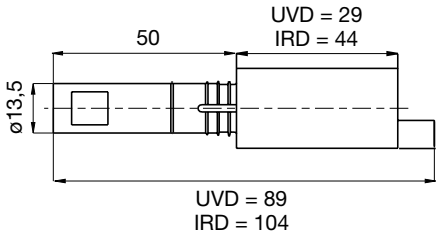

HOLDER M 93 FOR IRD

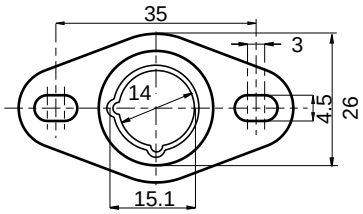

VARIATION IRD

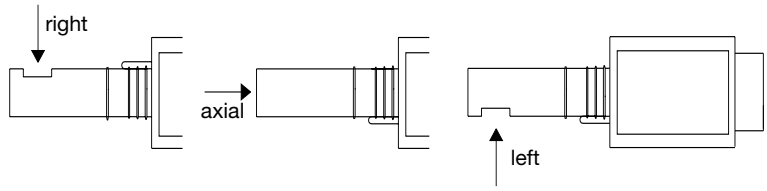

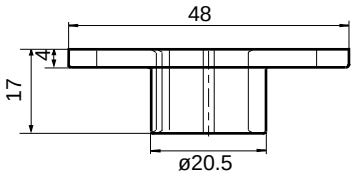

ORDERING INFORMATION

ITEM	DESIGNATION	ITEM NO.
Control box	DMG 970 Mod. 01	0350001
Control box	DMG 970 Mod. 02	0350002
Control box	DMG 970 Mod. 03	0350003
Socket	Wiring base S98	75310
Insert plate	PG-Plate	70502
optional	Cable entry plate	70501
Flame detector	IRD 1020 end-on	16522
Flame detector	IRD 1020 left	16523
Flame detector	IRD 1020 right	16521
optional	UVD 971	16722
Support for IRD	Holder M93 for IRD 1020	59093
Support for UVD	Holder M74 for UVD	59074
Connection cable	Plug type, 3 core cable, 0.6 m with tag wire ends	7236001

The above ordering information refers to the standard version.
Special versions are also included in our product range.

Specifications subject to change without notice

Satronic AG
Brüelstrasse 7
Postfach 324
CH-8157 Dielsdorf